TENNESSEE BOARD of REGENTS

HALE STADIUM RENOVATIONS, NORTH AND SOUTH ENTRIES

for

TENNESSEE STATE UNIVERSITY

at

NASHVILLE, TENNESSEE
APRIL 25, 2012
SBC NO 166/ 001-02-2011
HFR PROJECT NO. 201171.00

CAMPUS MAP

NOT TO SCALE

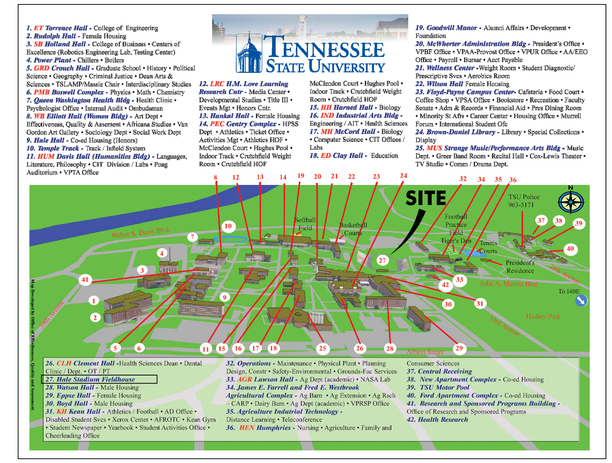

JAMES H. GILLIAM III
REGISTERED ARCHITECT
ARCHITECTURE
COMMERCE
NO. 103750
STATE OF TENNESSEE
4/25/12

ABBREVIATIONS

A.F.F. ABOVE FINISHED FLOOR
ACT ACOUSTICAL TILE
ACOUST. ACOUSTICAL
ADD'L. ADDITIONAL
ADJ. ADJUSTABLE
ADMIN. ADMINISTRATION
ALUM. ALUMINUM
APPROX. APPROXIMATE
B/B BALLED AND BURLAPPED
BR. BARE ROOT
BRKT. BRACKET
BRKTS. BRACKETS
B.W. BOTTOM OF THE WALL
C'SNK COUNTERSUNK
C.B. CATCH BASIN
C.J. CONTROL JOINT
C.M.U. CONCRETE MASONRY UNIT
C.T. CERAMIC TILE
CAB. CABINET
CLG. CEILING
CLO. CLOSET
COL. COLUMN
COMP. COMPUTER
CONC. CONCRETE
CONF. CONFERENCE
CONST. CONSTRUCTION
CONT. CONTINUOUS
CORR. CORRIDOR
CNTR. COUNTER
DIA. DIAMETER
DIM. DIMENSION
DISP. DISPENSER
DS DOWN SPOUT
DTL. DETAIL
DWGS. DRAWINGS
E.J. EXPANSION JOINT
E.W.C. ELECTRIC WATER COOLER
EA. EACH
ELEC. ELECTRICAL
ELEV. ELEVATION
ENCL. ENCLOSURE
EQUIP. EQUIPMENT
EXIST. EXISTING
EXP. EXPOSED, EXPANSION
EXT. EXTERIOR
F.D. FLOOR DRAIN
F.E.C. FIRE EXTINGUISHER CABINET
F.F.E. FINISH FLOOR ELEVATION
FDS FOLD DOWN SEAT
FH FIRE HYDRANT
FIN. FINISH
FLR. FLOOR
FOB FACE OF BRICK
FTG. FOOTING
G.B. GRAB BAR
GA. GAUGE
GAL. GALLON
GALV. GALVANIZED
GEN. GENERAL
GYP. GYPSUM
GYP. BD. GYPSUM BOARD
H.A.C. HOUSEKEEPING AIDS CLOSET
H.B. HOSE BIBB
H.M. HOLLOW METAL
HCM HANDICAPPED MIRROR
HD. HEAD
HRDBD HARDBOARD
INSUL. INSULATION
INT. INTERIOR
INV. INVERT
JT. JOINT
KIT. KITCHEN
LAV. LAVATORY
LAB. LABORATORY
LKR. LOCKER
LVS. LEAVES
M.O. MASONRY OPENING
M.T. METAL THRESHOLD
MACH. MACHINE
MAINT. MAINTENANCE
MANG. MANAGEMENT
MAT'L MATERIAL
MAX. MAXIMUM
MECH. MECHANICAL
MFR. MANUFACTURE
MGT. MANAGEMENT
MH. MANHOLE
MIN. MINIMUM
MIR. MIRROR
MISC. MISCELLANEOUS
MTD. MOUNTED
MTL. METAL
N.I.C. NOT IN CONTRACT
NOM. NOMINAL
O.C. ON CENTER
O.D. OVERFLOW DRAIN
O.F.E. OWNER FURNISHED EQUIPMENT
O.F.C.I. OWNER FURNISHED, CONTRACTOR INSTALLED
O.F.O.I. OWNER FURNISHED, OWNER INSTALLED
OPER. OPERATIONS
OPNG. OPENING
OPP. OPPOSITE
P.R.V. POWER ROOF VENTILATOR
P.T. PRESSURE TREATED
PART'N(S) PARTITION(S)
PL/PLAS. PLASTER
PLAS. LAM. PLASTIC LAMINATE
PLY. WD. PLYWOOD
PREP. PREPARATION
PREV. PREVENTIVE
PTD PAPER TOWEL DISPENSER
PTD/D PAPER TOWEL DISPENSER/DISP.
Q.T. QUARRY TILE
R RADIUS
R.D. ROOF DRAIN
R.O. ROUGH OPENING
RECPT. RECEPTION
REF. REFRIGERATOR
REF. REFER
REINF. REINFORCING, REINFORCED
REQ'D REQUIRED
RM. ROOM
RWL RAIN WATER LEADER
S.& R. SHELF AND ROD
SAN SANITARY
SC SCUPPER
SS SANITARY SEWER
S.S./ S/S STAINLESS STEEL
SB SPLASH BLOCK
SCHD. SCHEDULE
SCR SHOWER (DRESSING) CURTAIN ROD
SD SOAP DISH
SEC. SECTION
SGNL./SIG. SIGNAL
SHLVG. SHELVING
SIM. SIMILAR
SPEC. SPECIAL
SPEC.(S) SPECIFICATION(S)
SSS STAINLESS STEEL SHELF
STD. STANDARD
STL. STEEL
STO./STOR. STORAGE
STRUCT. STRUCTURAL
SYS./SYST. SYSTEM
TOIL. TOILET
TB TOWEL BAR
TC. TOP OF CURB
TBL. TABLE
TECH. TECHNICIAN
TEL. TELEPHONE
THK. THICK
THKNS. THICKNESS
TLT. TOILET
TPH TOILET PAPER HOLDER
TRAIN. TRAINING
TRANS. TRANSFORMER
TREAT. TREATMENT
TYP. TYPICAL
UNEXPD. UNEXPOSED
VEST. VESTIBULE
W.C./WC WHEEL CHAIR
W.H.F.E. WALL HUNG FIRE EXTINGUISHER
W/ WITH
WD. WOOD
WP. WATERPROOF(ING)
T.W. TOP OF WALL

BUILDING DATA

PROJECT SCOPE

SITE UPGRADES INCLUDING WALKS, RAMPS, AND STAIRS AND NEW TICKET BOOTHS FOR NORTH AND SOUTH ENTRANCES. TICKET BOOTHS ARE NOT SPRINKLERED.

APPLICABLE CODES – STATE

2006 INTERNATIONAL BUILDING CODE (IBC)
2006 INTERNATIONAL FIRE CODE (IFC)
2006 NFPA 101 LIFE SAFETY CODE (LSC)
2006 INTERNATIONAL MECHANICAL CODE
2006 INTERNATIONAL FUEL GAS CODE
2006 INTERNATIONAL PLUMBING CODE
2008 EDITION NFPA 70 NATIONAL ELECTRIC CODE
1991 AMERICAN DISABILITIES ACT (ADA) W/1996 AMENDMENTS

BUILDING DATA (TICKET BOOTH ONLY)

OCCUPANCY: BUSINESS
IBC: 304
LSC: CHAPTER 38

BUILDING AREA AND HEIGHT

TICKET BOOTH = 201 SQ. FT.
TWO BUILDINGS FOR TOTAL OF 402 SQ. FT.

BUILDING HEIGHT = 11'-6"

CONSTRUCTION TYPE:
IBC TABLE 601
TYPE II-B
LSC: 31.1.6
NO SPECIAL REQUIREMENTS

STRUCTURAL PROTECTION REQUIREMENTS
PER IBC TABLE 601 = 0 RATING

OCCUPANT LOADS

IBC TABLE 1004.1.1 LSC TABLE 7.3.1.2
BUSINESS = 100 SF/PERSON
ACTUAL = 4 PER BUILDING

EGRESS REQUIREMENTS

TRAVEL DISTANCE TO EXIT
IBC 1016.1 = 200 FT.
LSC 38.2.6.2 = 200 FT.

LOAD VALUES – STAIRS, HANDRAILS, AND GUARDRAILS

VALUES ARE FROM DIVISION 5 OF THE PROJECT MANUAL AND MAY EXCEED MINIMUM CODE REQUIREMENTS

STAIRS (IBC TABLE 1607.1)
40 PSF UNIFORM LOAD
300 PSF ON 4 SQ. IN. OF TREAD

HANDRAILS (IBC 1607.7)
UNIFORM LOAD = 50 PLF APPLIED IN ANY DIRECTION ALONG TOP OF RAIL
CONCENTRATED LOAD = 250 POUNDS
CONCENTRATED LOAD = 200 POUNDS (PER IBC)

GUARDRAILS (IBC 1607.7)
UNIFORM LOAD = 50 PLF APPLIED HORIZONTALLY WITH 110 PLF APPLIED VERTICALLY TO TOP OF RAIL
CONCENTRATED LOAD = 250 POUNDS
CONCENTRATED LOAD = 200 POUNDS (PER IBC)

CONCENTRATED LOAD = 250 POUNDS HORIZONTAL LOAD APPLIED TO A ONE SQ. FOOT AREA; INCLUDING INTERMEDIATE RAILS

SEISMIC DESIGN DATA:

Ss = 0.358 Fa = 1.20 Sds = 0.286
S1 = 0.136 Fv = 1.66 Sd1 = 0.151
SITE CLASSIFICATION = C (ASSUMED)
SEISMIC USE GROUP = GROUP II
SEISMIC DESIGN CATEGORY = C
BASIC STRUCTURAL SYSTEM = BEARING WALL SYSTEMS
SEISMIC RESISTING SYSTEMS = ORDINARY REINFORCED MASONRY SHEAR WALL
RESPONSE MODIFICATION FACTOR R = 2
DEFLECTION AMPLIFICATION FACTOR Cd = 1.75
ANALYSIS PROCEDURE = SEISMIC BASE SHEAR

FOUNDATIONS:

1. FOUNDATION DESIGN IS BASED ON THE FOLLOWING DESIGN ASSUMPTIONS:
   A. ALLOWABLE SOIL BEARING PRESSURE (FOR WALL FOOTINGS)_____2,500 PSF
   B. ALLOWABLE SOIL BEARING PRESSURE (FOR SPREAD FOOTINGS)____2,500 PSF
   C. SITE GRADING:
      1. ALL ORGANIC MATERIAL SHALL BE STRIPPED
      2. EXPOSED SUBGRADE SHALL BE PROOFROLLED TO DETECT SOFT AREAS
      3. PROOFROLLING SHALL BE DONE WITH A HEAVILY LOADED DOUBLE AXLE DUMPTRUCK AND OBSERVED BY A GEOTECHNICAL ENGINEER
      4. WHERE SOFT AREAS, ORGANIC MATERIAL, OR HIGHLY PLASTIC CLAYS ARE ENCOUNTERED DURING THE PROOFROLLING, THE AREA SHALL BE UNDERCUT AND REPLACED WITH COMPACTED ENGINEERED FILL PLACED IN LAYERS NOT TO EXCEED 8". THIS FILL SHALL BE COMPACTED TO A MINIMUM OF 98% STANDARD PROCTOR DENSITY (ASTM D-698)
2. THE FOOTING EXCAVATIONS SHALL BE MADE IN NEAT LINES AND SHALL BE FREE OF LOOSE OR WET MATERIALS. CONCRETE MAY BE PLACED DIRECTLY AGAINST THE SOIL WITHOUT FORMING.
3. FOOTINGS SHALL BE INSPECTED BY A SOILS ENGINEER PRIOR TO PLACING CONCRETE IN ORDER TO ENSURE THAT THE BEARING SURFACES ARE CONSISTENT WITH DESIGN ASSUMPTIONS.
4. WHERE SOFT AREAS ARE ENCOUNTERED, THE AREA SHALL BE UNDERCUT AS REQUIRED AND REPLACED WITH COMPACTED FILL OR CONCRETE. THE FILL SHALL BE PLACED IN LAYERS NOT TO EXCEED 8" AND SHALL BE COMPACTED TO A MINIMUM OF 98% STANDARD PROCTOR DENSITY (ASTM D-698).
5. FOOTINGS TO BEAR ON FIRM UNDISTURBED EARTH OR ON ENGINEERED FILL COMPACTED TO 98% STANDARD PROCTOR, NOT ON DEBRIS OR TOPSOIL. IF ROCK IS ENCOUNTERED IN ORIGINAL EARTH, EXCAVATE TO 12" BELOW THE BOTTOM OF THE FOOTING AND PROVIDE 12" COMPACTED EARTH FILL.

PROJECT TEAM

OWNER
TENNESSEE BOARD OF REGENTS
Trish Whitlock
Trish.Whitlock@tbr.edu
P 615.366.4476

UNIVERSITY
TENNESSEE STATE UNIVERSITY
George Herring, Project Manager
George.Herring@tnstate.edu
P 615.963.1374

ARCHITECT
HART FREELAND ROBERTS, INC.
Steve Griffin, AIA, Senior Vice President
sgriffin@hfrdesign.com
P 615.370.8500

CIVIL ENGINEER
HART FREELAND ROBERTS, INC.
Jim Gilliam, P.E., Vice President
jgilliam@hfrdesign.com
P 615.370.8500

STRUCTURAL ENGINEER
HART FREELAND ROBERTS, INC.
Brian Crump, P.E., Senior Vice President
bcrump@hfrdesign.com
P 615.370.8500

MECHANICAL ENGINEER
I.C. THOMASSON ASSOCIATES, INC.
David Peters, P.E.
dpeters@icthomasson.com
P 615.346.3400

ELECTRICAL ENGINEER
I.C. THOMASSON ASSOCIATES, INC.
Erich Vierkant, P.E.
evierkant@icthomasson.com
P 615.346.3400

INDEX OF DRAWINGS

GENERAL
G0.00 COVER SHEET
G1.00 GENERAL PROJECT INFORMATION

CIVIL
C0.01 EXISTING CONDITIONS
C0.02 GENERAL NOTES
C0.03 SITE DEMOLITION PLAN SOUTH ENTRY PLAZA
C0.04 SITE DEMOLITION PLAN NORTH ENTRY
C1.00 OVERALL SITE PLAN
C1.01 SITE PLAN, SOUTH ENTRY/ PLAZA
C1.02 SITE PLAN, NORTH ENTRY
C2.00 OVERALL GRADING AND DRAINAGE PLAN
C2.01 GRADING AND DRAINAGE PLAN, SOUTH ENTRY PLAZA
C2.02 GRADING AND DRAINAGE PLAN, NORTH ENTRY
C4.01 SITE DETAILS
C4.02 SITE DETAILS
C4.03 SITE DETAILS
C4.04 SITE DETAILS

ARCHITECTURAL
A1.01 SOUTH PLAZA GATE
A1.02 NORTH PLAZA GATE
A1.03 DETAILS
A1.04 DETAILS

MECHANICAL
M1.01 MECHANICAL– FLOOR PLANS

ELECTRICAL
E0.00 ELECTRICAL– LEGEND
E0.01 ELECTRICAL– SITE PLAN
E0.02 ELECTRICAL– SITE PLAN
E1.01 LIGHTING– FLOOR PLANS
E2.01 POWER & SYSTEMS– FLOOR PLANS

SYMBOLOGY

EARTH
STRUCTURAL CONCRETE
FINISH WOOD
BATT INSULATION
STEEL SECTION
2X LUMBER
RIGID INSULATION
PLYWOOD
GRAVEL FILL
LIGHTWEIGHT CONCRETE
BRICK
NEW DOOR, FRAME AND RELATED ATTACHMENTS
NO. — DOOR NUMBER – OWNER
XXX — ELEVATION TAG
W* — WINDOW SYMBOL
XXX / XXX — DETAIL LOCATOR SYMBOL
XX/XXXX — BUILDING AND/OR WALL SECTION LOCATOR

GENERAL NOTES

DO NOT SCALE DRAWINGS. IF DIMENSIONS ARE IN QUESTIONS, THE CONTRACTOR SHALL BE RESPONSIBLE FOR CLARIFICATION BEFORE CONTINUING WITH CONSTRUCTION.

THE CONTRACTOR SHALL VERIFY ON THE SITE, ALL DIMENSIONS AND EQUIPMENT LOCATIONS.

DIMENSIONS FOR NEW CONSTRUCTION ARE TO FACE OF FINISH OF WALL AND CENTERLINE OF COLUMNS. DIMENSIONS INDICATE NOMINAL DIMENSIONS RATHER THAN ACTUAL DIMENSIONS.

ALL WOOD BLOCKING INSIDE BUILDING SHALL BE FIRE RESISTANT TREATED. ROOF BLOCKING SHALL BE PRESSURE TREATED.

PROVIDE BLOCKING WHERE REQUIRED TO SUPPORT EQUIPMENT AND MISCELLANEOUS ITEMS, I.E., TYPICAL CASEWORK, CABINETS, AND RELATED ITEMS.

MATERIAL CONTAINING ASBESTOS OR PCB WILL NOT BE PERMITTED TO BE INCORPORATED INTO THIS PROJECT.

HFR DESIGN
1910
ARCHITECTURE
ENGINEERING
PLANNING
INTERIORS

HART FREELAND ROBERTS, INC.
7101 Executive Center Drive
Suite 300
Brentwood, TN 37024
615.370.8500 phone
615.370.8530 fax
www.hfrdesign.com web
Nashville, Tennessee
Jackson, Tennessee
Kansas City, Missouri
Louisville, Kentucky

STEPHEN P. BROWN
REGISTERED ARCHITECT
AGRICULTURE
NO. 12250
STATE OF TENNESSEE
4-23-2012

HALE STADIUM RENOVATIONS
NORTH AND SOUTH ENTRIES
TENNESSEE STATE UNIVERSITY
JOHN A MERRITT BLVD
NASHVILLE, TN
SBC# 166/001-02-2011

PROJ. NO.: 2011171
DATE: 25 APRIL 2012

GENERAL PROJECT INFORMATION

G
1.00

PLOT DATE: 4/23/2012 4:08:55 PM (BWALONE)
©COPYRIGHT 2012 - ALL RIGHTS RESERVED. NO PORTION(S) OF THIS DOCUMENT MAY BE REPRODUCED WITHOUT THE EXPRESSED WRITTEN CONSENT OF HART FREELAND ROBERTS, INC.

1. ALL DISTANCES WERE MEASURED WITH E.D.M. EQUIPMENT AND HAVE BEEN ADJUSTED FOR TEMPERATURE.

2. UTILITIES HAVE BEEN PLOTTED FROM SURFACE FEATURES AND MARKINGS FOUND AT THE TIME OF SURVEY AND AVAILABLE MAPS AND RECORDS. THERE MAY BE OTHER UTILITIES, THE EXISTENCE OF WHICH ARE NOT KNOWN TO THE UNDERSIGNED. SIZE AND LOCATION OF ALL UNDERGROUND UTILITIES MUST BE VERIFIED BY THE APPROPRIATE UTILITY COMPANY PRIOR TO ANY CONSTRUCTION.

3) ELEVATIONS AND CONTOURS WERE DERIVED USING RADIAL TRIGONOMETRY AND DTM METHODS. CONTOUR INTERVALS ARE ONE (1) FOOT. ELEVATIONS TIED TO NAVD 88.

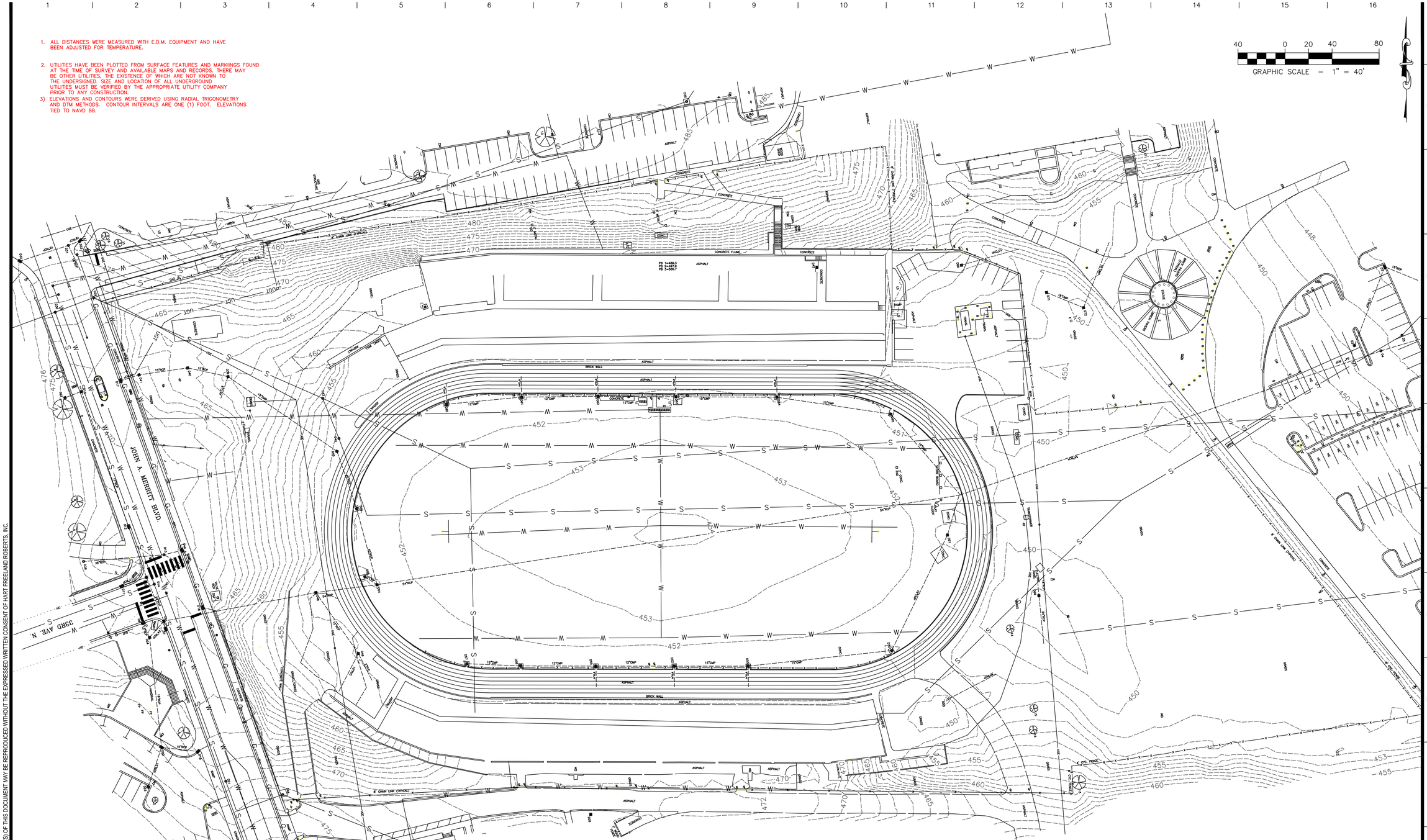

LEGEND

WATER VALVE		EDGE OF PAVEMENT	
CLEAN-OUT	C.O.	EDGE OF CONC.	
LANDSCAPE	LS		
GAS METER		CURB	
WATER METER		WATER LINE	W
FIRE HYDRANT		SEWER LINE	S
SIGN POST		GAS LINE	G
CATCH BASIN		STORM SEWER/CULVERT	54"RCP
CURB INLET		EASEMENT LINE	
MANHOLE		FENCE	X
UTILITY POLE		PARKING STRIPE	
LIGHT POLE		BUILDING LINE	
TREE		OVERHEAD UTILITY	OH
HANDICAP PARKING SPACE	HC	CONTOUR LINE	475

TREE TABLE

NO.	SIZE	TYPE
3	14"	PERSIMMON
4	8"	MAGNOLIA
5	18"	TREE
6	12"	MAPLE
7	20"	TREE
8	14"	TREE
9	10"	TREE
10	8"	TREE
11	8"	TREE

DRAINAGE STRUCTURE TABLE

NO.	TYPE	T.C.	INV.
D1	CURB INLET (SIN)	446.6	442.4
D2	MANHOLE	448.0	412.3
D3	CATCH BASIN (SIN)	448.9	445.2
D4	MANHOLE STORM	448.3	434.5
D5	MANHOLE	447.7	435.6
D6	MANHOLE	446.1	435.1 OUT 411.8
D7	CURB INLET (DOU)	468.4	465.9
D8	CURB INLET (SIN)	468.2	466.1
D9	CATCH BASIN (SIN)	468.5	460.4
D10	CATCH BASIN (SIN)	468.7	464.7
D11	CURB INLET (SIN)	468.5	466.5
D12	CURB INLET (SIN)	469.0	465.8
D13	CATCH BASIN (SIN)	470.3	467.1
D14	MANHOLE	468.9	4XX.X
D15	MANHOLE STORM	469.4	460.3
D16	CURB INLET (SIN)	468.9	464.9
D17	CURB INLET (SIN)	470.3	464.5
D18	CURB INLET (DOU)	468.5	466.0

DRAINAGE STRUCTURE TABLE

NO.	TYPE	T.C.	INV.
D19	CURB INLET (SIN)	471.9	469.4
D20	CURB INLET (SIN)	473.7	468.5
D21	MANHOLE	472.6	467.4
D22	MANHOLE	473.2	468.35
D23	CATCH BASIN (SIN)	476.0	471.7
D24	CATCH BASIN (SIN)	469.1	461.4
D25	INVERT 2" P.V.C.	N/A	468.9
D26	MANHOLE STORM	472.7	462.7
D27	CATCH BASIN (SIN)	473.8	467.8
D28	CATCH BASIN (SIN)	471.0	469.9
D29	MANHOLE	473.0	465.2(W) 465.1(N&S) 465.0(NE)OUT
D30	MANHOLE	472.5	466.4(S) 465.4(E) 466.3(N)OUT
D31	MANHOLE STORM	476.0	470.2
D32	CURB INLET (DOU)	475.5	471.5
D33	CURB INLET (SIN)	476.0	473.7
D34	MANHOLE	484.1	475.35(N) 475.3(S)OUT
D35	MANHOLE	485.8	481.1(NW) 480.9(S)OUT

DRAINAGE STRUCTURE TABLE

NO.	TYPE	T.C.	INV.
D36	MANHOLE VALVE	468.7	N/A
D37	MANHOLE VALVE	478.0	N/A
D38	INVERT 2" P.V.C.	N/A	468.7
D39	CATCH BASIN (SIN)	461.8	457.8
D40	CATCH BASIN (SIN)	464.8	461.1
D41	CATCH BASIN (SIN)	466.7	463.2
D42	CATCH BASIN (SIN)	461.1	459.0
D43	MANHOLE	455.3	450.4(W) 450.3(E)OUT
D44	MANHOLE	451.6	447.2(W) 445.8(E)OUT
D45	CATCH BASIN (DOU)	451.4	446.3
D46	MANHOLE VALVE	473.8	N/A
D47	MANHOLE VALVE	467.7	N/A
D48	CATCH BASIN (SIN)	451.3	445.4
D49	CATCH BASIN (SIN)	452.0	449.5
D50	INVERT 30" R.C.P.	N/A	447.7
D51	CATCH BASIN (SIN)	450.5	444.1
D52	CATCH BASIN (SIN)	450.8	447.2
D53	CATCH BASIN (SIN)	450.7	446.7

DRAINAGE STRUCTURE TABLE

NO.	TYPE	T.C.	INV.
D54	CATCH BASIN (SIN)	450.9	444.1
D55	CATCH BASIN (SIN)	450.8	448.0
D56	CATCH BASIN (SIN)	450.8	448.6
D57	CATCH BASIN (SIN)	450.8	449.2
D58	CATCH BASIN (SIN)	450.5	446.0
D59	CATCH BASIN (SIN)	450.7	445.2
D60	CATCH BASIN (SIN)	450.7	448.5
D61	CATCH BASIN (SIN)	450.6	447.8
D62	CATCH BASIN (SIN)	450.8	447.5
D63	CATCH BASIN (SIN)	450.6	446.8
D64	CATCH BASIN (SIN)	450.7	445.9
D65	CATCH BASIN (SIN)	450.0	444.8
D66	CATCH BASIN (SIN)	453.2	450.4
D67	INVERT 54" R.C.P.	N/A	429.7
D69	CATCH BASIN (SIN)	448.1	444.5
D70	CATCH BASIN (SIN)	450.7	450.7
D71	CATCH BASIN (SIN)	450.5	447.7
D72	CATCH BASIN (SIN)	449.7	445.2

PLOT DATE: 4/24/2012 7:49:41 AM (GOODSON)
©COPYRIGHT 2012 - ALL RIGHTS RESERVED. NO PORTION(S) OF THIS DOCUMENT MAY BE REPRODUCED WITHOUT THE EXPRESSED WRITTEN CONSENT OF HART FREELAND ROBERTS, INC.

HFR DESIGN
1910
ARCHITECTURE
ENGINEERING
PLANNING
INTERIORS

HART FREELAND ROBERTS, INC.
7101 Executive Center Drive
Suite 300
Brentwood, TN 37024

615.370.8500 phone
615.370.8530 fax
www.hfrdesign.com web

Nashville, Tennessee
Jackson, Tennessee
Kansas City, Missouri
Louisville, Kentucky

JAMES B. GILES
REGISTERED ENGINEER
No. 103290
STATE OF TENNESSEE
4/25/12

HALE STADIUM RENOVATIONS NORTH AND SOUTH ENTRIES TENNESSEE STATE UNIVERSITY

JOHN A MERRITT BLVD
NASHVILLE, TN
SBC# 166/001-02-2011

PROJ. NO.: 2011171

DATE: 25 APRIL 2012

EXISTING CONDITIONS

C0.01

DEMOLITION NOTES

1. DEMOLITION AND REMOVAL OPERATIONS SHALL COMMENCE ONLY AFTER ALL EROSION AND SEDIMENTATION CONTROL MEASURES ARE IN PLACE AND FUNCTIONAL.
2. PROVIDE NEAT AND STRAIGHT SAW CUTS OF EXISTING PAVEMENT ALONG ALL LIMITS OF PAVEMENT DEMOLITION.
3. ALL DEMOLISHED MATERIALS BECOME THE PROPERTY OF THE CONTRACTOR UNLESS OTHERWISE DESIGNATED. DISPOSE OF OFF THE OWNER'S PROPERTY IN A LEGAL MANNER
4. ALL PAVEMENT BASE COURSES, SIDEWALK, CURBS, BUILDINGS, FOUNDATIONS, ETC. IN THE AREA TO BE REMOVED SHALL BE REMOVED TO FULL DEPTH. EXISTING BASE COURSE MATERIALS MAY BE WORKED INTO THE NEW PAVEMENT OR BUILDING SUBGRADE PROVIDED THAT THE GRADATION, CONSISTENCY, COMPACTION, SUBGRADE CONDITION, ETC. ARE IN ACCORDANCE WITH THE SPECIFICATIONS. BASE COURSE MATERIALS SHALL NOT BE WORKED INTO THE SUBGRADE OF AREAS TO RECEIVE PLANTING.
5. CONTRACTOR SHALL OBTAIN ALL PERMITS REQUIRED FOR EXECUTION OF THE WORK.
6. THE CONTRACTOR SHALL USE WATER SPRINKLING AND OTHER SUITABLE METHODS AS NECESSARY TO CONTROL DUST AND DIRT CAUSED BY THE DEMOLITION WORK.
7. ALL ITEMS OF CONSTRUCTION REMAINING AND SPECIFICALLY MENTIONED THAT INTERFERE WITH THE NEW CONSTRUCTION SHALL BE IMMEDIATELY BROUGHT TO THE ATTENTION OF THE DESIGNER.
8. CONTRACTOR SHALL PROVIDE PROTECTION TO ALL STREETS, FENCES, TREES, UTILITIES AND STRUCTURES THAT ARE TO REMAIN. CONTRACTOR-CAUSED DAMAGE SHALL BE REPAIRED TO MATCH EXISTING AT NO ADDITIONAL COST TO THE OWNER.
9. CAVITIES LEFT BY STRUCTURE REMOVAL SHALL BE BACKFILLED WITH SATISFACTORY MATERIAL AND COMPACTED TO 98% OF MAXIMUM DENSITY PER ASTM D698.
10. CONTRACTOR SHALL LOCATE AND MARK ALL EXISTING UTILITIES PRIOR TO COMMENCING WORK. COORDINATE WITH LOCAL UTILITY COMPANIES PRIOR TO UTILITY DISCONNECT.
11. NOTIFY LOCAL UTILITY LOCATOR SERVICE OF INTENDED DEMOLITION OPERATIONS. SEE GENERAL UTILITY NOTE #4 ON SHEET C0.02 FOR PHONE NUMBER.
12. EXISTING INFORMATION/TOPOGRAPHIC SURVEY WAS PREPARED BY HART FREELAND ROBERTS, INC. ON 12/22/2011.
13. PAVEMENT MARKINGS TO BE REMOVED SHALL BE PAINTED OVER TO MATCH PAVEMENT OR REMOVED WITH WIRE BRUSHING.
14. EXCEPT AS SHOWN, NO TREES SHALL BE REMOVED AND/OR VEGETATION DISTURBED WITHOUT APPROVAL OF THE DESIGNER.

LAYOUT & PAVING NOTES

1. THE CONTRACTOR SHALL CHECK EXISTING GRADES, DIMENSIONS, AND INVERTS IN THE FIELD AND REPORT ANY DISCREPANCIES TO THE DESIGNER PRIOR TO BEGINNING WORK.
2. THE CONTRACTOR SHALL VERIFY THE EXACT LOCATION OF ALL EXISTING UTILITIES, INCLUDING IRRIGATION LINES. TAKE CARE TO PROTECT UTILITIES THAT ARE TO REMAIN, AND REPAIR CONTRACTOR-CAUSED DAMAGE ACCORDING TO CURRENT LOCAL STANDARDS AND AT THE CONTRACTOR'S EXPENSE. COORDINATE ALL CONSTRUCTION WITH THE APPROPRIATE UTILITY COMPANY. RELOCATE IRRIGATION LINES AS NECESSARY FOR CONSTRUCTION.
3. THE CONTRACTOR SHALL COMPLY WITH ALL LOCAL CODES, OBTAIN ALL PERMITS AND PAY ALL FEES PRIOR TO BEGINNING WORK.
4. PROVIDE A SMOOTH TRANSITION BETWEEN EXISTING PAVEMENT AND NEW PAVEMENT. FIELD ADJUSTMENT OF FINAL GRADES MAY BE NECESSARY. INSTALL ALL UTILITIES PRIOR TO INSTALLATION OF PAVEMENT.
5. THE CONTRACTOR SHALL PROTECT ALL TREES TO REMAIN IN ACCORDANCE WITH THE SPECIFICATIONS. DO NOT OPERATE OR STORE HEAVY EQUIPMENT, NOR HANDLE OR STORE MATERIALS, WITHIN THE DRIPLINES OF TREES OR OUTSIDE THE LIMIT OF GRADING.
6. CONCRETE WALKS AND PADS SHALL HAVE A BROOM FINISH UNLESS OTHERWISE NOTED. ALL CONCRETE SHALL BE 4,000 P.S.I. UNLESS OTHERWISE NOTED, CURB RAMPS, SIDEWALK SLOPES, AND DRIVEWAY RAMPS SHALL BE CONSTRUCTED IN ACCORDANCE WITH ALL CURRENT LOCAL REQUIREMENTS. IF APPLICABLE, THE CONTRACTOR SHALL REQUEST INSPECTION OF SIDEWALK AND RAMP FORMS PRIOR TO PLACEMENT OF CONCRETE.
7. ALL DAMAGE TO EXISTING ASPHALT PAVEMENT TO REMAIN WHICH RESULTS FROM NEW CONSTRUCTION SHALL BE REPLACED WITH LIKE MATERIALS AT CONTRACTOR'S EXPENSE.
8. DIMENSIONS ARE TO THE FACE OF CURB, EDGE OF CONCRETE, OR TO THE FACE OF BUILDING UNLESS OTHERWISE NOTED.
9. COORDINATES ARE FOR FACE OF BUILDING, CENTER LINES OF DRIVEWAYS, CENTER OF SANITARY SEWER MANHOLES, AND CENTER AT FACE OF CURB ON CURB INLETS, UNLESS OTHERWISE NOTED.
10. EXCESS MATERIAL SHALL BE DISPOSED OF BY THE CONTRACTOR OFF THE OWNER'S PROPERTY AT NO ADDITIONAL COST, IN A LEGAL MANNER.
11. MAINTAIN ONE SET OF AS-BUILT DRAWINGS ON THE JOB SITE FOR DISTRIBUTION TO THE DESIGNER UPON COMPLETION.
12. PARKING STRIPES SHALL BE 4-INCH WHITE PAVEMENT PAINT.
13. CONTRACTION JOINTS SHALL BE HAND TROWELED TO A DEPTH OF AT LEAST ¼ THE CONCRETE THICKNESS AND SHALL DIVIDE CONCRETE AS INDICATED ON PLANS.
14. CONTRACTOR SHALL PROVIDE AS-BUILT ELEVATION SURVEY FOR ALL NEW SIDEWALK RAMPS.

STORMWATER POLLUTION PREVENTION NOTES

1. THE OWNER AND THE CONTRACTOR ARE REQUIRED TO SUBMIT A NOTICE OF INTENT (NOI) APPLICATION TO DISCHARGE CONSTRUCTION-ACTIVITY STORMWATER TO THE LOCAL TENNESSEE ENVIRONMENTAL ASSISTANCE CENTER AT LEAST 30 DAYS PRIOR TO BEGINNING CONSTRUCTION. THE CONTRACTOR AND OWNER SHALL PROVIDE (WITH THE NOI FOR THIS PROJECT) EXISTING NPDES PERMIT TRACKING NUMBERS FOR SITES WHERE BORROW MATERIAL MAY BE OBTAINED AND WHERE SPOIL MATERIAL MAY BE PLACED. SHOULD PERMITS NOT EXIST FOR BORROW AND SPOIL SITES, SEPARATE NOI'S SHALL BE PROVIDED BY THE OWNER AND CONTRACTOR.
2. THE NOTICE OF COVERAGE (NOC) OF THE PERMIT TO DISCHARGE CONSTRUCTION-ACTIVITY STORMWATER SHALL BE POSTED NEAR THE CONSTRUCTION ENTRANCE. THE CONTRACTOR SHALL HAVE A SET OF APPROVED EROSION CONTROL PLANS ON SITE DURING ALL CONSTRUCTION.
3. THE CONSTRUCTION ACTIVITY ANTICIPATED ON THIS PROJECT INCLUDES CLEARING, GRUBBING, GRADING, TOPSOIL PLACEMENT, AND SEEDING.
4. THE APPROXIMATE TOTAL AREA OF GRADING PROPOSED IS 1.10 ACRES.
5. THE ANTICIPATED FILL MATERIAL WILL CONSIST OF ON-SITE SOIL AND/OR SHOT ROCK MATERIALS.
6. THE RECEIVING WATER/STORM SEWER OPERATOR IS METRO NASHVILLE, TENNESSEE.
7. CONSTRUCTION SHALL BE SEQUENCED TO MINIMIZE EXPOSURE TIME OF CLEARED SURFACE AREA. EROSION AND SEDIMENT CONTROL MEASURES SHALL BE IN PLACE AND FUNCTIONAL PRIOR TO EARTH MOVING OPERATIONS. ALL CONTROL MEASURES SHALL BE CHECKED AND REPAIRED AS NECESSARY, AT MAXIMUM 7 CALENDAR DAYS IN DRY PERIODS, AND WITHIN 24 HOURS OF ANY RAINFALL EXCEEDING 0.25 INCH PER 24 HOUR PERIOD.
8. THE CONTRACTOR SHALL DESIGNATE IN WRITING THE NAME AND PHONE NUMBER OF THE INDIVIDUAL RESPONSIBLE FOR EROSION AND SEDIMENT CONTROLS.
9. PRE-CONSTRUCTION VEGETATIVE GROUND COVER SHALL NOT BE REMOVED MORE THAN 20 CALENDAR DAYS PRIOR TO GRADING. ALL GRADED AREAS EXPECTED TO REMAIN UNFINISHED AND UNWORKED FOR MORE THAN 7 CALENDAR DAYS SHALL BE COVERED WITH TEMPORARY GRASS, SOD, STRAW, MULCH OR FABRIC MATERIAL. PERMANENT SOIL STABILIZATION SHALL BE INSTALLED WITHIN 15 CALENDAR DAYS OF FINAL GRADING.
10. THE CONTRACTOR SHALL MAINTAIN RECORDS OF EROSION CONTROL INSPECTIONS AND REPAIRS FOR A MINIMUM OF 3 YEARS AFTER COMPLETION OF CONSTRUCTION.
11. TEMPORARY SEEDING FOR TENNESSEE PROJECTS INCLUDE THE FOLLOWING OPTIONS;
    JAN 1-MAY 1 ITALIAN RYE/KOREAN LESPEDEZA/SUMMER OATS
    MAY 1-JULY 15 SUDAN OR STARR MILLET
    JULY 15-JAN 1 BALBOA RYE/ITALIAN RYE
12. MULCHING SHALL CONSIST OF LOOSE HAY OR STRAW APPLIED AT THE RATE OF 2 TONS/ACRE.
13. THE CONTRACTOR SHALL REMOVE SEDIMENT FROM TRAPS, SILT, FENCES, SEDIMENT PONDS, ETC. AS NECESSARY AND WHEN CAPACITY HAS BEEN REDUCED BY 50%.
14. STOCKPILES SHALL BE STABILIZED AND PROTECTED FROM EROSION.
15. UPON COMPLETION OF SITE STABILIZATION, THE OWNER AND CONTRACTOR SHALL PROVIDE A NOTICE OF TERMINATION (NOT) FOR THE PROJECT TO THE LOCAL ENVIRONMENTAL ASSISTANCE CENTER. A COPY OF THE NOT SHALL BE PROVIDED TO THE DESIGNER.
16. I CERTIFY UNDER PENALTY OF LAW THAT THESE STORMWATER POLLUTION PREVENTION PLANS WERE PREPARED UNDER MY DIRECTION OR SUPERVISION, AND BY QUALIFIED PERSONNEL WHO PROPERLY GATHERED AND EVALUATED THE INFORMATION SUBMITTED. THE INFORMATION SUBMITTED IS, TO THE BEST OF MY KNOWLEDGE AND BELIEF, TRUE, ACCURATE AND COMPLETE. I AM AWARE THAT THERE ARE SIGNIFICANT PENALTIES FOR SUBMITTING FALSE INFORMATION, INCLUDING THE POSSIBILITY OF FINE AND IMPRISONMENT.

GENERAL UTILITY NOTES

1. WATER AND SEWER CONSTRUCTION SHALL BE PERFORMED IN ACCORDANCE WITH ALL LOCAL CODES AND SPECIFICATIONS.
2. THE CONTRACTOR SHALL PAY ALL FEES AND OBTAIN ALL PERMITS.
3. ALL EXISTING UNDERGROUND UTILITY LOCATIONS ARE APPROXIMATE AND ARE BASED ON TOPOGRAPHIC SURVEYS AND RECORD DRAWINGS FROM THE FACILITY. ADDITIONAL UTILITIES MAY BE PRESENT. SHOULD UNCHARTED UTILITIES BE ENCOUNTERED DURING EXCAVATION OPERATIONS, THE CONTRACTOR SHALL NOTIFY THE DESIGNER AS SOON AS POSSIBLE FOR INSTRUCTIONS.
4. THE CONTRACTOR SHALL NOTIFY THE TENNESSEE ONE-CALL SYSTEM, INC. (TOCS) AT 811 AND ANY NON-TOCS MEMBER UTILITY INDIVIDUALLY AT LEAST 3 WORKING DAYS PRIOR TO ANY EXCAVATION AND/OR DEMOLITION.
5. MAINTAIN 10-FOOT HORIZONTAL AND 18-INCH VERTICAL SEPARATION BETWEEN SANITARY SEWER AND WATER SUPPLY LINES.
6. CONTRACTOR SHALL VERIFY THE EXACT LOCATION OF ALL EXISTING UTILITIES INCLUDING IRRIGATION. TAKE CARE TO PROTECT UTILITIES THAT ARE TO REMAIN. REPAIR DAMAGE ACCORDING TO LOCAL STANDARDS AND AT THE CONTRACTOR'S EXPENSE. COORDINATE ALL CONSTRUCTION WITH THE APPROPRIATE UTILITY COMPANY. RELOCATE IRRIGATION LINES AS NECESSARY FOR CONSTRUCTION.
7. THE CONTRACTOR SHALL BE RESPONSIBLE FOR COORDINATING THE SEQUENCING OF CONSTRUCTION FOR ALL UTILITY LINES SO THAT WATER LINES AND UNDERGROUND ELECTRIC DO NOT CONFLICT WITH SANITARY SEWERS OR STORM SEWERS. INSTALL UTILITIES PRIOR TO FINAL PAVEMENT CONSTRUCTION.
8. BACKFILL UTILITY TRENCHES UNDER PAVEMENT AREAS WITH CRUSHED STONE OR GRAVEL. BACKFILL UTILITY TRENCHES IN LAWN AREAS WITH SATISFACTORY FILL MATERIAL COMPACTED TO AT LEAST 98% OF MAXIMUM PER ASTM D698.
9. ADJUST ALL EXISTING CASTINGS TO PROPOSED FINISH GRADE.
10. THRUST BLOCK ALL WATERLINE FITTINGS WITH CONCRETE (2,500 P.S.I. MIN.) POURED AGAINST UNDISTURBED EARTH TO SUSTAIN 120% TEST PRESSURE SPECIFIED. FORM THRUST BLOCKING SO AS TO NOT EMBED JOINTS, BOLTS, VALVE BOXES OR OPERATING NUTS.
11. PROVIDE VENTS AT HIGH POINTS IN WATERLINE AS NECESSARY FOR EXPELLING AIR DURING FILLING OF WATER LINE. PROVIDE BRONZE CORPORATION STOP FOR CLOSING VENT DURING TESTING AND SERVICE. LEAVE VENT COMPONENTS PLUGGED AND ATTACHED TO PIPE AFTER SUCCESSFUL TEST.
12. EXCESS MATERIAL SHALL BE DISPOSED OF BY THE CONTRACTOR OFF THE OWNER'S PROPERTY AT NO ADDITIONAL COST IN A LEGAL MANNER.
13. ALL SANITARY SEWER PIPE SHALL BE CLASS SDR 35 PVC UNLESS NOTED OTHERWISE.
14. PROVIDE AS-BUILT DRAWINGS WHICH INCLUDE AT LEAST TWO DIMENSIONS TO EACH VALVE AND MANHOLE FROM KNOWN SITE FEATURES. DRAWINGS SHALL INCLUDE VERTICAL AND HORIZONTAL INFORMATION ON ALL NEW UTILITIES AS WELL AS EXISTING UTILITIES ENCOUNTERED.

GRADING, DRAINAGE AND EROSION CONTROL NOTES

1. NO TREES SHALL BE REMOVED NOR VEGETATION DISTURBED EXCEPT AS NECESSARY FOR GRADING PURPOSES AND ONLY AS APPROVED BY THE DESIGNER.
2. IT IS THE OWNER'S INTENT TO PRESERVE ALL OF THE EXISTING SITE VEGETATION OUTSIDE THE LIMITS OF GRADING.
3. TOPSOIL SHALL BE STRIPPED FROM ALL CUT AND FILL AREAS, STOCKPILED AND REDISTRIBUTED OVER GRADED AREAS TO A MINIMUM DEPTH OF 6 INCHES. MAKE STOCKPILES FREE-DRAINING AND PROVIDE EROSION AND SEDIMENTATION CONTROLS AROUND STOCKPILES.
4. ALL GRADED AREAS SHALL BE SEEDED AND MULCHED WITHIN 15 DAYS AFTER GRADING IS COMPLETED.
5. CONSTRUCT TEMPORARY EROSION CONTROL AS SHOWN ON THE DRAWINGS PRIOR TO BEGINNING GRADING OPERATIONS.
6. ALL DRAINAGE STRUCTURES, PIPES WITHIN THE LIMITS OF CONSTRUCTION, AND DETENTION PONDS SHALL HAVE SEDIMENT REMOVED PRIOR TO FINAL ACCEPTANCE.
7. SILT BARRIERS SHALL BE CLEANED OF ACCUMULATED SEDIMENT WHEN APPROXIMATELY 50% FILLED.
8. ALL LOCATIONS OF TEMPORARY EROSION CONTROL DEVICES SHALL BE SUBJECT TO ADJUSTMENT AS DIRECTED BY THE DESIGNER.
9. WHEN THE TEMPORARY EROSION CONTROL DEVICES ARE NO LONGER REQUIRED FOR THE INTENDED PURPOSE (IN THE DESIGNER'S OPINION), THEY SHALL BE REMOVED.
10. REPLACE DAMAGED AND WORN OUT SILT BARRIERS AS DIRECTED BY THE DESIGNER.
11. THE CONTRACTOR SHALL PROTECT ALL TREES DESIGNATED TO REMAIN. DO NOT OPERATE OR STORE HEAVY EQUIPMENT, NOR HANDLE/STORE MATERIALS, WITHIN THE DRIPLINES OF TREES.
12. TOP OF GRATE ELEVATIONS FOR CURB INLETS ARE GIVEN TO THE CENTER OF THE INLETS AT THE FACE OF CURB. THE GRATES SHALL SLOPE LONGITUDINALLY WITH THE PAVEMENT GRADE. ADJUST THE CASTING TO FALL ALONG THE CURB LINE.
13. THE CONTRACTOR SHALL VERIFY THE EXACT LOCATION OF ALL EXISTING UTILITIES, PROTECT UTILITIES TO REMAIN, AND REPAIR CONTACTOR-CAUSED DAMAGE ACCORDING TO LOCAL STANDARDS AT CONTRACTOR'S EXPENSE.
14. NOTIFY LOCAL UTILITY LOCATOR SERVICE BEFORE INTENDED EXCAVATION/UTILITY TRENCHING OPERATIONS. SEE GENERAL UTILITY NOTE #4 ON THIS SHEET FOR PHONE NUMBER.
15. IN THE EVENT OF ANY DISCREPANCIES FOUND IN THE DRAWINGS OR IF PROBLEMS ARE ENCOUNTERED DURING CONSTRUCTION, THE CONTRACTOR SHALL NOTIFY THE DESIGNER BEFORE PROCEEDING WITH THE WORK.
16. THE CONTRACTOR SHALL GIVE ALL NECESSARY NOTICE AND OBTAIN ALL PERMITS.
17. SPOT ELEVATIONS AND CONTOURS REPRESENT PROPOSED FINISHED GRADE AND TOP OF FINISHED PAVEMENT.
18. CONTRACTOR SHALL VERIFY EXISTING ELEVATIONS AND INVERTS PRIOR TO BEGINNING WORK.
19. EXCESS MATERIAL SHALL BE DISPOSED OF BY THE CONTRACTOR OFF THE OWNER'S PROPERTY AT NO ADDITIONAL COST IN A LEGAL MANNER.
20. CONTOUR LINES AND SPOT ELEVATIONS ARE THE RESULT OF A DETAILED ENGINEERING GRADING DESIGN AND REFLECT A PLANNED INTENT WITH REGARD TO DRAINAGE. SHOULD THE CONTRACTOR HAVE ANY QUESTIONS OF THIS INTENT OR ANY PROBLEMS WITH CONTINUITY OF GRADES, THE DESIGNER SHALL BE CONTACTED PRIOR TO BEGINNING WORK.
21. EXISTING MANHOLE CASTINGS TO REMAIN SHALL BE RESET TO MATCH NEW GRADE.
22. ALL CURBS AND SIDEWALKS SHALL BE BACKFILLED WITH TOPSOIL, SEEDED AND MULCHED, UNLESS OTHERWISE NOTED.
23. ALL PIPES UNDER PAVED AREAS SHALL BE BACK FILLED WITH CRUSHED STONE UNLESS NOTED OTHERWISE. ALL PIPES UNDER LAWN AREAS SHALL BE BACK FILLED WITH SATISFACTORY MATERIAL AND COMPACTED TO 98% OF MAXIMUM PER ASTM D698 UNLESS NOTED OTHERWISE.
24. ALL STORM DRAINAGE PIPE SHALL BE HDPE UNLESS OTHERWISE NOTED. PIPE LENGTHS SHOWN ARE APPROXIMATE.
25. ALL CUT AND FILL SLOPES TO BE 3:1 MAXIMUM UNLESS SPECIFICALLY STATED OTHERWISE.
26. SATISFACTORY TOPSOIL IS DEFINED AS SOIL BEING FREE OF CONTAMINANTS, SUBSOIL, CLAY CLUMP, STONES OR OTHER OBJECTS OVER 1 INCH IN DIAMETER.
27. AFTER STRIPPING TOPSOIL, PROOFROLL SUBGRADE WITH A LOADED DUMP TRUCK WITH A MINIMUM WEIGHT OF 20 TONS.
28. FINISH GRADE TOLERANCES ARE 0.10 FOOT ABOVE OR BELOW DESIGN ELEVATIONS.
29. PROVIDE TEMPORARY SEEDING ON STOCKPILES AND ALL OTHER AREAS OF THE SITE THAT WILL REMAIN UNDISTURBED FOR 30 DAYS OR MORE.
30. MAXIMUM SLOPES IN ALL DIRECTIONS OF HANDICAP PARKING SPACES/AISLES SHALL BE 2%.
31. EARTHWORK FILL SHALL INCLUDE STRIPPING TOPSOIL AND PLACING ENGINEERED FILL IN MAXIMUM 8" COMPACTED LIFTS WITH DENSITY OF 98% OF MAXIMUM PER ASTM D698.
32. I CERTIFY THAT THESE PLANS HAVE BEEN PREPARED BY ME AND/OR UNDER MY DIRECT SUPERVISION. THIS PROJECT IS PLANNED TO DISTURB MORE THAN ONE ACRE. IT THEREFORE FALLS UNDER THE TENNESSEE DIVISION OF WATER POLLUTION CONTROL'S GENERAL NPDES PERMIT TO DISCHARGE STORM WATER ASSOCIATED WITH CONSTRUCTION ACTIVITY. HART FREELAND ROBERTS WILL ASSIST THE CONTRACTOR IN SUBMITTING THE NOTICE OF INTENT (NOI) TO CONSTRUCT TO THE STATE AT LEAST 30 DAYS PRIOR TO BEGINNING LAND DISTURBANCE.

HFR DESIGN
1910
ARCHITECTURE
ENGINEERING
PLANNING
INTERIORS

HART FREELAND ROBERTS, INC.
7101 Executive Center Drive
Suite 300
Brentwood, TN 37024
615.370.8500 phone
615.370.8530 fax
www.hfrdesign.com web
Nashville, Tennessee
Jackson, Tennessee
Kansas City, Missouri
Louisville, Kentucky

JAMES H. GILLAM III
REGISTERED ARCHITECT
No. 102290
STATE OF TENNESSEE
4/25/12

HALE STADIUM RENOVATIONS
NORTH AND SOUTH ENTRIES
TENNESSEE STATE UNIVERSITY
JOHN A MERRITT BLVD
NASHVILLE, TN
SBC# 166/001-02-2011

PROJ. NO.: 2011171
DATE: 25 APRIL 2012

GENERAL NOTES

C0.02

PLOT DATE: 4/24/2012 7:55:45 AM (GDODSON)
©COPYRIGHT 2012 - ALL RIGHTS RESERVED. NO PORTION(S) OF THIS DOCUMENT MAY BE REPRODUCED WITHOUT THE EXPRESSED WRITTEN CONSENT OF HART FREELAND ROBERTS, INC.

EXISTING FENCE TO BE REMOVED BY OWNER

GUY TO BE REMOVED.

45 L.F. OF EXISTING CONCRETE WALL TO BE REMOVED

CONCRETE SIDEWALK AND SIDEWALK APPURTENANCES ONLY TO BE REMOVED. SIGNS REMOVED TO BE REINSTALLED.

POLE TO BE REMOVED (PROVIDED SALVAGED MATERIAL TO OWNER)

JOHN A. MERRITT BLVD.

106'

GRAPHIC SCALE – 1" = 20'

PROPOSED LEGEND

EXISTING FEATURE TO BE REMOVED

LEGEND

WATER VALVE	
CLEAN OUT	C.O.
LANDSCAPE	LS
GAS METER	
WATER METER	
FIRE HYDRANT	
SIGN POST	
CATCH BASIN	
CURB INLET	
MANHOLE	
UTILITY POLE	
LIGHT POLE	
TREE	
HANDICAP PARKING SPACE	HC
EDGE OF PAVEMENT	
EDGE OF CONC.	
CURB	
WATER LINE	W
SEWER LINE	S
GAS LINE	G
STORM SEWER/CULVERT	54"RCP
EASEMENT LINE	
FENCE	X
PARKING STRIPE	
BUILDING LINE	
OVERHEAD UTILITY	OH
CONTOUR LINE	475

HFR DESIGN

ARCHITECTURE
ENGINEERING
PLANNING
INTERIORS

HART FREELAND ROBERTS, INC.
7101 Executive Center Drive
Suite 300
Brentwood, TN 37024

615.370.8500 phone
615.370.8530 fax
www.hfrdesign.com web

Nashville, Tennessee
Jackson, Tennessee
Kansas City, Missouri
Louisville, Kentucky

JAMES R. GILLIAM REGISTERED ENGINEER NO. 102750 STATE OF TENNESSEE

4/25/12

HALE STADIUM RENOVATIONS NORTH AND SOUTH ENTRIES TENNESSEE STATE UNIVERSITY

JOHN A MERRITT BLVD
NASHVILLE, TN
SBC# 166/001-02-2011

PROJ. NO.: 2011171

DATE: 25 APRIL 2012

SITE DEMOLITION PLAN SOUTH ENTRY PLAZA

C0.03

PLOT DATE: 4/24/2012 8:31:37 AM (GOODSON)
©COPYRIGHT 2012 - ALL RIGHTS RESERVED. NO PORTION(S) OF THIS DOCUMENT MAY BE REPRODUCED WITHOUT THE EXPRESSED WRITTEN CONSENT OF HART FREELAND ROBERTS, INC.

PROPOSED LEGEND

EXISTING FEATURE TO BE REMOVED

LEGEND

WATER VALVE	
CLEAN OUT	C.O.
LANDSCAPE	LS
GAS METER	
WATER METER	
FIRE HYDRANT	
SIGN POST	
CATCH BASIN	
CURB INLET	
MANHOLE	
UTILITY POLE	
LIGHT POLE	
TREE	TRE
HANDICAP PARKING SPACE	HC
EDGE OF PAVEMENT	
EDGE OF CONC.	
CURB	
WATER LINE	W
SEWER LINE	S
GAS LINE	G
STORM SEWER/CULVERT	54"RCP
EASEMENT LINE	
FENCE	X
PARKING STRIPE	
BUILDING LINE	
OVERHEAD UTILITY	OH
CONTOUR LINE	475

HFR DESIGN
1910
ARCHITECTURE
ENGINEERING
PLANNING
INTERIORS

HART FREELAND ROBERTS, INC.
7101 Executive Center Drive
Suite 300
Brentwood, TN 37024

615.370.8500 phone
615.370.8530 fax
www.hfrdesign.com web

Nashville, Tennessee
Jackson, Tennessee
Kansas City, Missouri
Louisville, Kentucky

JAMES H. GILLIAM III
REGISTERED ARCHITECT
NO. 103750
STATE OF TENNESSEE
4/25/12

HALE STADIUM RENOVATIONS NORTH AND SOUTH ENTRIES TENNESSEE STATE UNIVERSITY

JOHN A MERRITT BLVD
NASHVILLE, TN
SBC# 166/001-02-2011

PROJ. NO.: 2011171

DATE: 25 APRIL 2012

SITE DEMOLITION PLAN NORTH ENTRY

C0.04

PLOT DATE: 4/24/2012 7:56:52 AM (GDODSON)
©COPYRIGHT 2012 - ALL RIGHTS RESERVED. NO PORTION(S) OF THIS DOCUMENT MAY BE REPRODUCED WITHOUT THE EXPRESSED WRITTEN CONSENT OF HART FREELAND ROBERTS, INC.

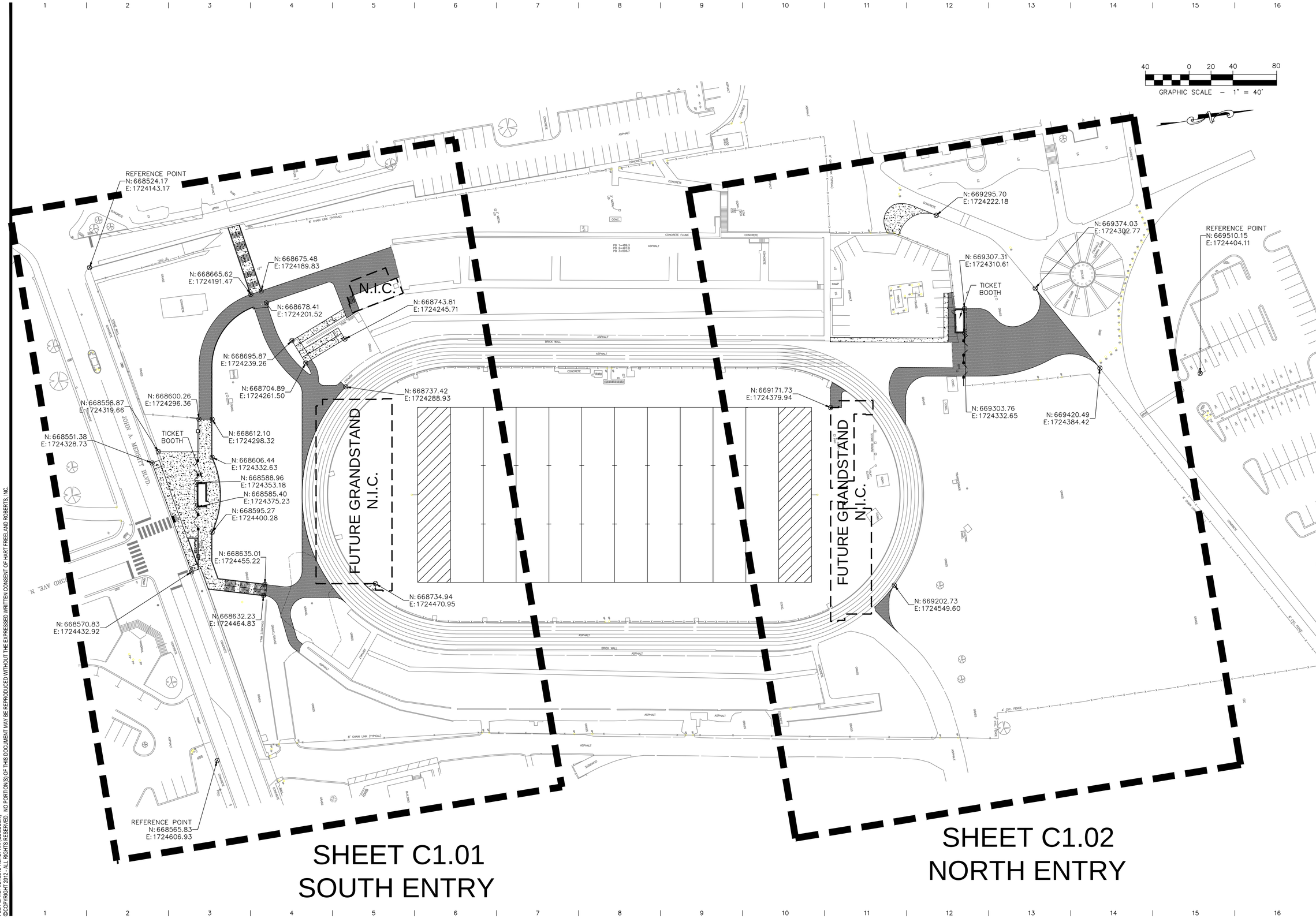

HFR DESIGN

ARCHITECTURE
ENGINEERING
PLANNING
INTERIORS

HART FREELAND ROBERTS, INC.
7101 Executive Center Drive
Suite 300
Brentwood, TN 37024

615.370.8500 phone
615.370.8530 fax
www.hfrdesign.com web

Nashville, Tennessee
Jackson, Tennessee
Kansas City, Missouri
Louisville, Kentucky

JAMES R. GRAY
REGISTERED ARCHITECT
No. 103290
STATE OF TENNESSEE
4/25/12

HALE STADIUM RENOVATIONS NORTH AND SOUTH ENTRIES TENNESSEE STATE UNIVERSITY

JOHN A MERRITT BLVD
NASHVILLE, TN
SBC# 166/001-02-2011

PROJ. NO.: 2011171

DATE: 25 APRIL 2012

OVERALL SITE PLAN

C1.00

PLOT DATE: 4/24/2012 7:57:27 AM (GDODSON)
©COPYRIGHT 2012–ALL RIGHTS RESERVED. NO PORTION(S) OF THIS DOCUMENT MAY BE REPRODUCED WITHOUT THE EXPRESSED WRITTEN CONSENT OF HART FREELAND ROBERTS, INC.

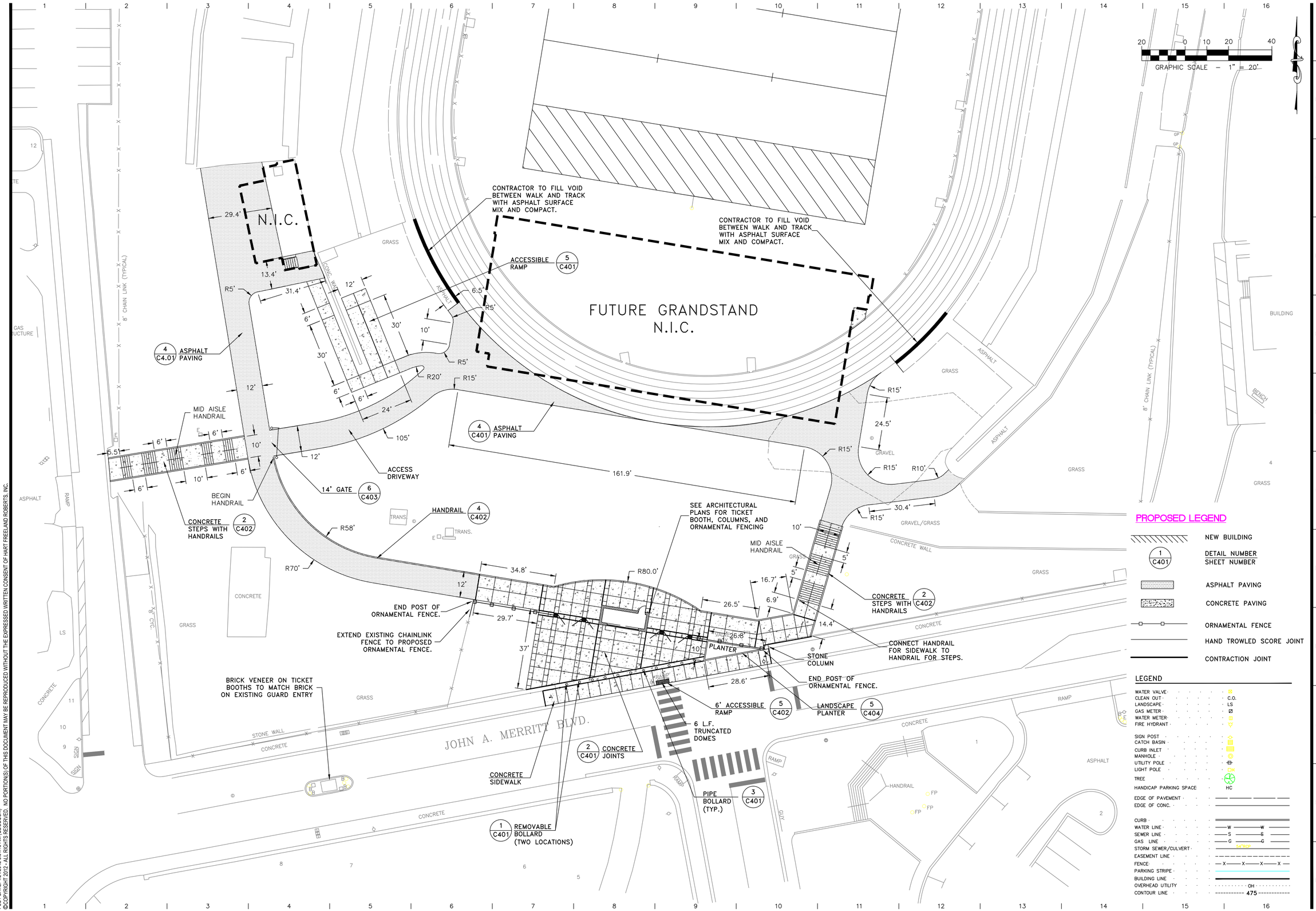

PROPOSED LEGEND

- NEW BUILDING
- 1 / C401 — DETAIL NUMBER / SHEET NUMBER
- ASPHALT PAVING
- CONCRETE PAVING
- ORNAMENTAL FENCE
- HAND TROWLED SCORE JOINT
- CONTRACTION JOINT

LEGEND

WATER VALVE	WV
CLEAN OUT	C.O.
LANDSCAPE	LS
GAS METER	G
WATER METER	W
FIRE HYDRANT	FH
SIGN POST	SP
CATCH BASIN	CB
CURB INLET	CI
MANHOLE	MH
UTILITY POLE	UP
LIGHT POLE	LP
TREE	TR
HANDICAP PARKING SPACE	HC
EDGE OF PAVEMENT	
EDGE OF CONC.	
CURB	
WATER LINE	—W—W—
SEWER LINE	—S—S—
GAS LINE	—G—G—
STORM SEWER/CULVERT	24"RCP
EASEMENT LINE	
FENCE	—X—X—X—X—
PARKING STRIPE	
BUILDING LINE	
OVERHEAD UTILITY	OH
CONTOUR LINE	475

HFR DESIGN
1910
ARCHITECTURE
ENGINEERING
PLANNING
INTERIORS

HART FREELAND ROBERTS, INC.
7101 Executive Center Drive
Suite 300
Brentwood, TN 37024

615.370.8500 phone
615.370.8530 fax
www.hfrdesign.com web

Nashville, Tennessee
Jackson, Tennessee
Kansas City, Missouri
Louisville, Kentucky

JAMES H. GILLIAM III
REGISTERED ARCHITECT
No. 102700
STATE OF TENNESSEE
4/25/12

HALE STADIUM RENOVATIONS NORTH AND SOUTH ENTRIES TENNESSEE STATE UNIVERSITY

JOHN A MERRITT BLVD
NASHVILLE, TN
SBC# 166/001-02-2011

PROJ. NO.: 2011171

DATE: 25 APRIL 2012

SITE PLAN SOUTH ENTRY / PLAZA

C1.01

PLOT DATE: 4/24/2012 8:51:19 AM (GDODSON)
©COPYRIGHT 2012–ALL RIGHTS RESERVED. NO PORTION(S) OF THIS DOCUMENT MAY BE REPRODUCED WITHOUT THE EXPRESSED WRITTEN CONSENT OF HART FREELAND ROBERTS, INC.

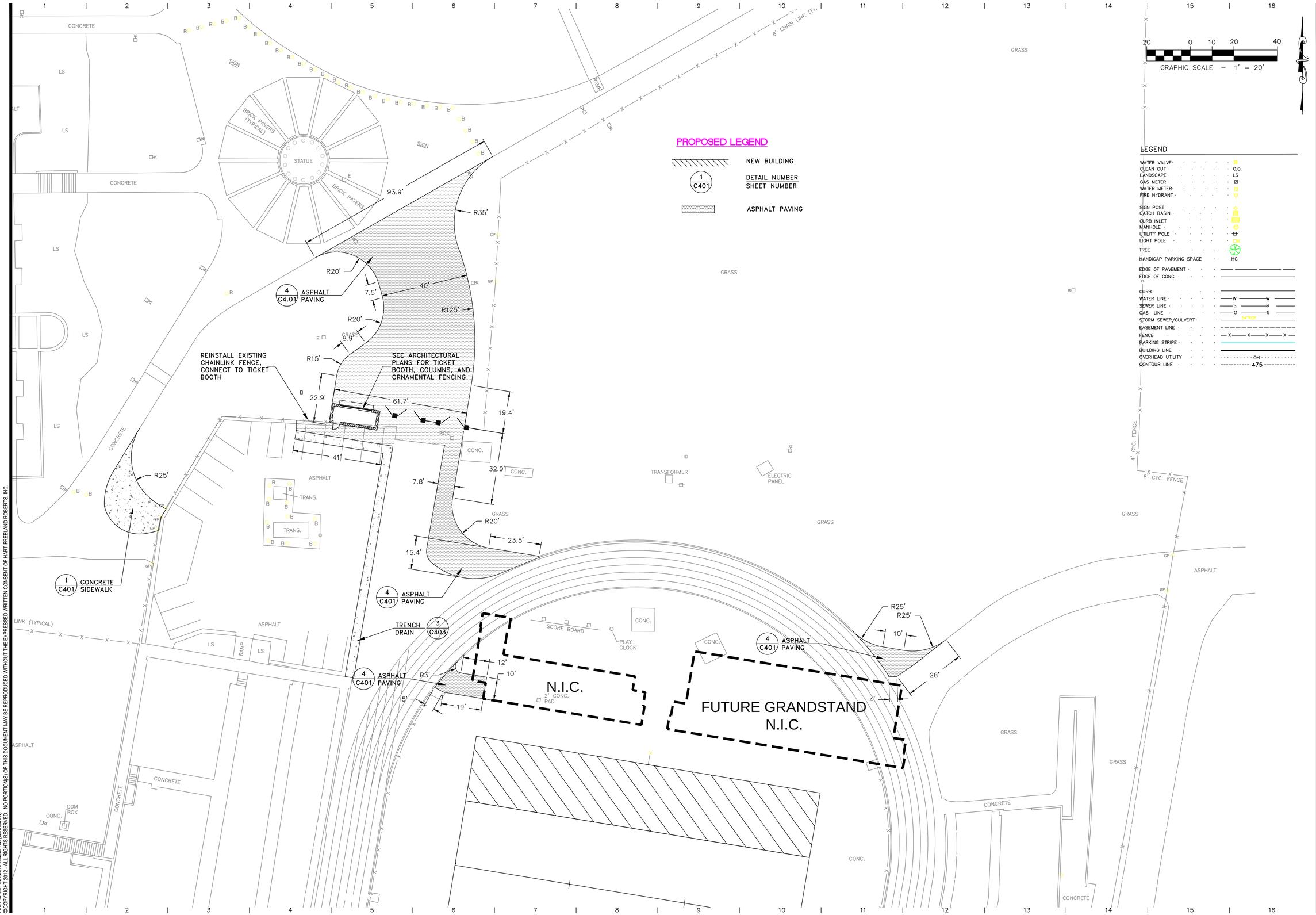

PLOT DATE: 4/24/2012 8:52:57 AM (GDODSON)
©COPYRIGHT 2012 - ALL RIGHTS RESERVED. NO PORTION(S) OF THIS DOCUMENT MAY BE REPRODUCED WITHOUT THE EXPRESSED WRITTEN CONSENT OF HART FREELAND ROBERTS, INC.

HFR DESIGN

ARCHITECTURE
ENGINEERING
PLANNING
INTERIORS

HART FREELAND ROBERTS, INC.
7101 Executive Center Drive
Suite 300
Brentwood, TN 37024

615.370.8500 phone
615.370.8530 fax
www.hfrdesign.com web

Nashville, Tennessee
Jackson, Tennessee
Kansas City, Missouri
Louisville, Kentucky

HALE STADIUM RENOVATIONS NORTH AND SOUTH ENTRIES TENNESSEE STATE UNIVERSITY

JOHN A MERRITT BLVD
NASHVILLE, TN
SBC# 166/001-02-2011

PROJ. NO.: 2011171

DATE: 25 APRIL 2012

SITE PLAN NORTH ENTRY

C1.02

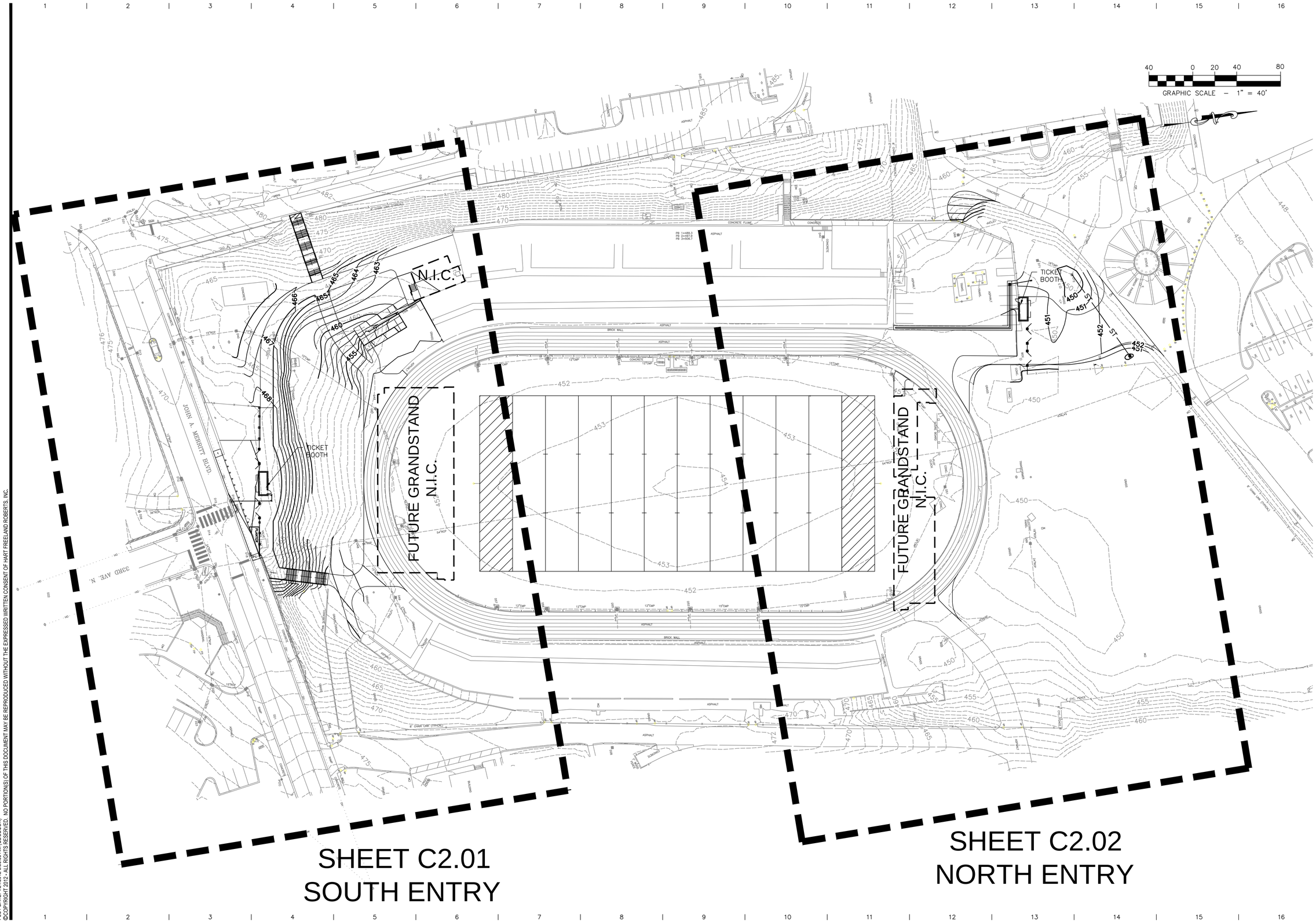

PLOT DATE: 4/24/2012 8:53:33 AM (GBOGSON)
©COPYRIGHT 2012 - ALL RIGHTS RESERVED. NO PORTION(S) OF THIS DOCUMENT MAY BE REPRODUCED WITHOUT THE EXPRESSED WRITTEN CONSENT OF HART FREELAND ROBERTS, INC.

HFR DESIGN

ARCHITECTURE
ENGINEERING
PLANNING
INTERIORS

HART FREELAND ROBERTS, INC.
7101 Executive Center Drive
Suite 300
Brentwood, TN 37024

615.370.8500 phone
615.370.8530 fax
www.hfrdesign.com web

Nashville, Tennessee
Jackson, Tennessee
Kansas City, Missouri
Louisville, Kentucky

JAMES H. GIBBS III
REGISTERED ENGINEER
No. 102290
STATE OF TENNESSEE
4/25/12

HALE STADIUM RENOVATIONS NORTH AND SOUTH ENTRIES TENNESSEE STATE UNIVERSITY

JOHN A MERRITT BLVD
NASHVILLE, TN
SBC# 166/001-02-2011

PROJ. NO.: 2011171

DATE: 25 APRIL 2012

OVERALL GRADING AND DRAINAGE PLAN

C2.00

NOTE:
CONTRACTOR SHALL PLACE 3' OF SOD ADJACENT TO NEW WALKWAYS, DRIVEWAYS, STAIRS, AND RAMP. REMAINING DISTURBED AREA TO BE SEEDED.

GRAPHIC SCALE – 1" = 20'

N.I.C.

FUTURE GRANDSTAND
N.I.C.

REMOVE BRICK RISERS ON EXISTING MANHOLE AND RESET EXISTING FRAME AND LID TO PROPOSED GRADE, 453.51±

NOTE:
CONTOURS IN THIS AREA ARE APPROXIMATE DUE TO DEMOLITION OF ROTC BUILDING AND SUBSEQUENT FILL. CONTRACTOR SHALL VERIFY PRIOR TO BID, NO EXTRAS WILL BE ALLOWED DUE TO DIFFERING CONDITIONS.

MAX. 5.0% GRADE

CAP EXISTING CATCH BASIN

APPROXIMATLEY 55 L.F. OF 4" ø SDR 35 @ 1.0% SLOPE.

CLEANOUT 5 C403

JOHN A. MERRITT BLVD.

PROPOSED LEGEND

	NEW BUILDING
545	NEW CONTOUR
1 C401	DETAIL NUMBER SHEET NUMBER

LEGEND

WATER VALVE	W
CLEAN OUT	C.O.
LANDSCAPE	LS
GAS METER	G
WATER METER	W
FIRE HYDRANT	FH
SIGN POST	SP
CATCH BASIN	CB
CURB INLET	CI
MANHOLE	MH
UTILITY POLE	UP
LIGHT POLE	LP
TREE	TR
HANDICAP PARKING SPACE	HC
EDGE OF PAVEMENT	
EDGE OF CONC.	
CURB	
WATER LINE	W
SEWER LINE	S
GAS LINE	G
STORM SEWER/CULVERT	24"RCP
EASEMENT LINE	
FENCE	X
PARKING STRIPE	
BUILDING LINE	
OVERHEAD UTILITY	OH
CONTOUR LINE	475

HFR DESIGN
1910
ARCHITECTURE
ENGINEERING
PLANNING
INTERIORS

HART FREELAND ROBERTS, INC.
7101 Executive Center Drive
Suite 300
Brentwood, TN 37024

615.370.8500 phone
615.370.8530 fax
www.hfrdesign.com web

Nashville, Tennessee
Jackson, Tennessee
Kansas City, Missouri
Louisville, Kentucky

JAMES H. GILLIAM III
REGISTERED ENGINEER
NO. 103750
STATE OF TENNESSEE
4/25/12

HALE STADIUM RENOVATIONS NORTH AND SOUTH ENTRIES TENNESSEE STATE UNIVERSITY

JOHN A MERRITT BLVD
NASHVILLE, TN
SBC# 166/001-02-2011

PROJ. NO.: 2011171

DATE: 25 APRIL 2012

GRADING & DRAINAGE PLAN SOUTH ENTRY / PLAZA

C2.01

PLOT DATE: 4/24/2012 8:54:20 AM (GDODSON)
©COPYRIGHT 2012 - ALL RIGHTS RESERVED. NO PORTION(S) OF THIS DOCUMENT MAY BE REPRODUCED WITHOUT THE EXPRESSED WRITTEN CONSENT OF HART FREELAND ROBERTS, INC.

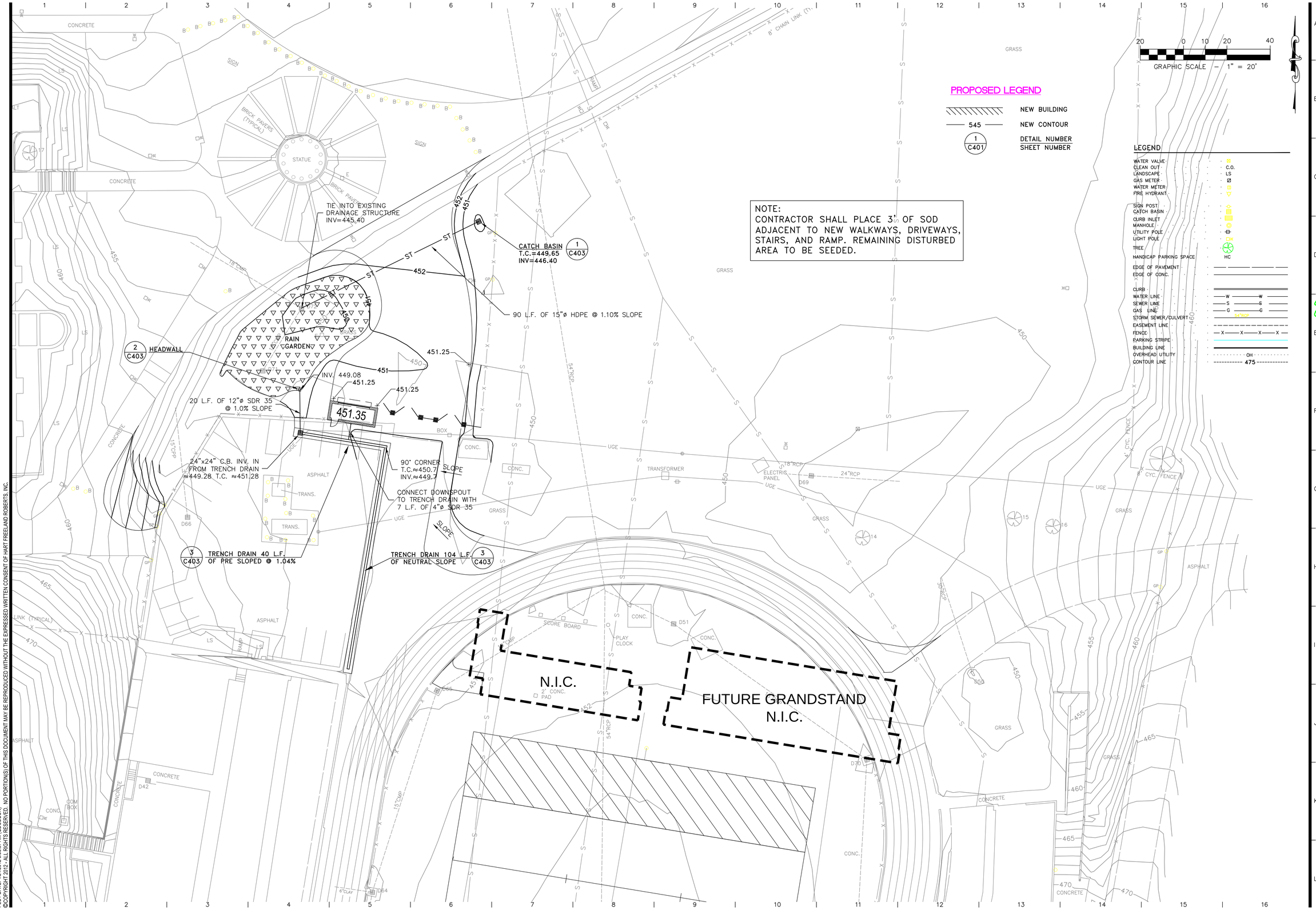

PLOT DATE: 4/24/2012 8:55:07 AM (GDODSON)
©COPYRIGHT 2012 - ALL RIGHTS RESERVED. NO PORTION(S) OF THIS DOCUMENT MAY BE REPRODUCED WITHOUT THE EXPRESSED WRITTEN CONSENT OF HART FREELAND ROBERTS, INC.

HFR DESIGN

ARCHITECTURE
ENGINEERING
PLANNING
INTERIORS

HART FREELAND ROBERTS, INC.
7101 Executive Center Drive
Suite 300
Brentwood, TN 37024
615.370.8500 phone
615.370.8530 fax
www.hfrdesign.com web
Nashville, Tennessee
Jackson, Tennessee
Kansas City, Missouri
Louisville, Kentucky

4/25/12

HALE STADIUM RENOVATIONS NORTH AND SOUTH ENTRIES TENNESSEE STATE UNIVERSITY

JOHN A MERRITT BLVD
NASHVILLE, TN
SBC# 166/001-02-2011

PROJ. NO.: 2011171

DATE: 25 APRIL 2012

GRADING & DRAINAGE PLAN NORTH ENTRY

C2.02

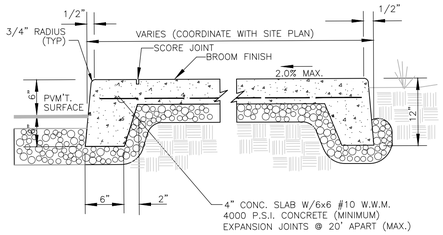

SIDEWALK AT PAVEMENT

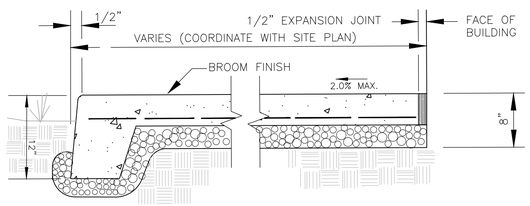

SIDEWALK AT BUILDING

NOTES:

SIDEWALKS SHALL BE 4" MIN. THICKNESS WITH 4" CRUSHED STONE BASE.

WHERE ADJACENT TO A FIXED STRUCTURE A 1/2" EXPANSION JOINT WITH FILLER SHALL BE INSTALLED.

COORDINATE WITH JOINT DETAIL THIS SHEET.

WHERE WALK ABUTS ASPHALT, PROVIDE A TOOLED JOINT 6" FROM FACE OF CURB.

1 CONCRETE SIDEWALK
NOT TO SCALE

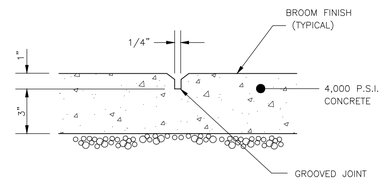

CONTROL JOINT

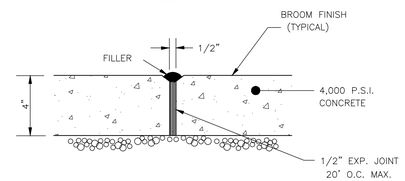

EXPANSION JOINT

2 CONCRETE JOINTS
NOT TO SCALE

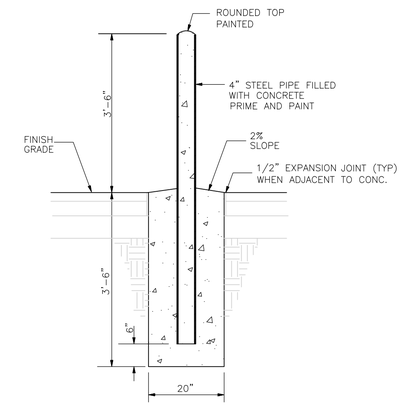

3 STEEL PIPE BOLLARD
NOT TO SCALE

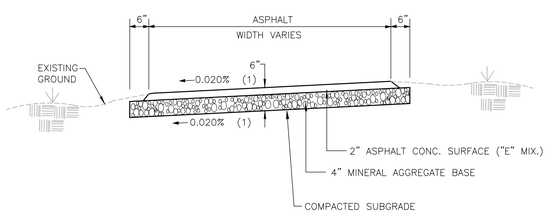

(1) CROSS SLOPE SHALL BE IN THE DIRECTION OF THE SLOPE OF EXISTING GROUND.

4 ASPHALT PAVING
NOT TO SCALE

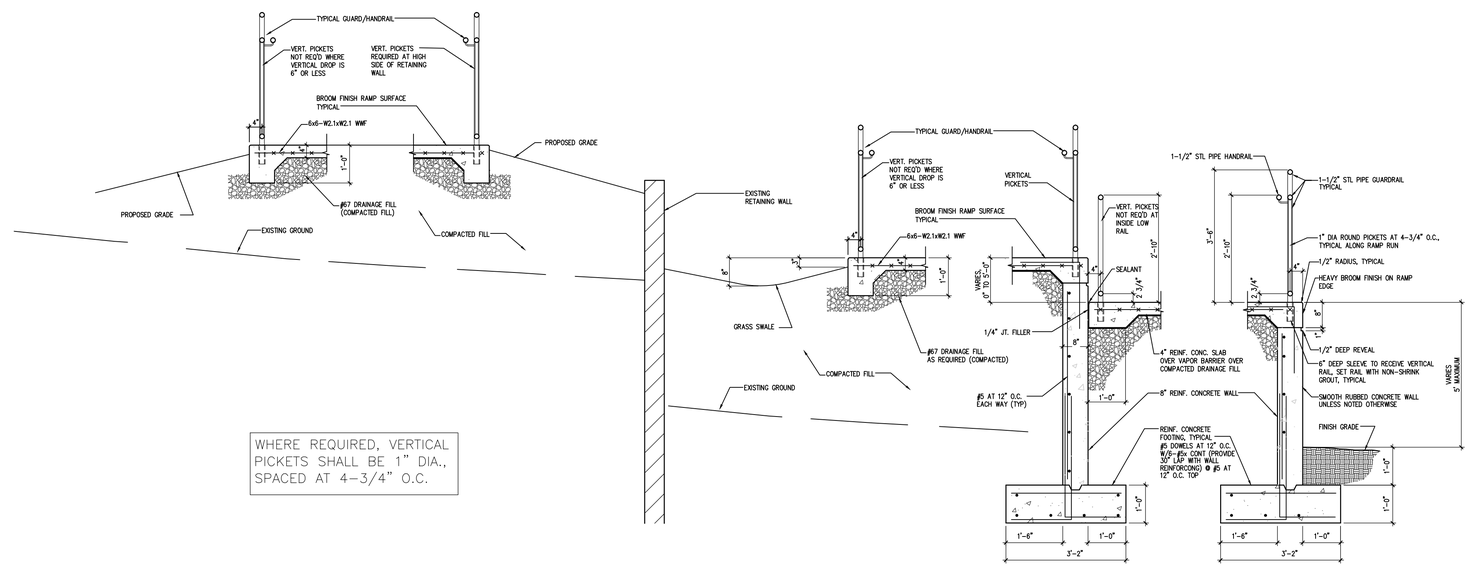

WHERE REQUIRED, VERTICAL PICKETS SHALL BE 1" DIA., SPACED AT 4-3/4" O.C.

5 ACCESSIBLE RAMP
NOT TO SCALE

HFR DESIGN
1910
ARCHITECTURE
ENGINEERING
PLANNING
INTERIORS

HART FREELAND ROBERTS, INC.
7101 Executive Center Drive
Suite 300
Brentwood, TN 37024

615.370.8500 phone
615.370.8530 fax
www.hfrdesign.com web

Nashville, Tennessee
Jackson, Tennessee
Kansas City, Missouri
Louisville, Kentucky

JAMES H. GILLIAM III
REGISTERED ARCHITECT
No. 10137591
STATE OF TENNESSEE
4/25/12

HALE STADIUM RENOVATIONS NORTH AND SOUTH ENTRIES TENNESSEE STATE UNIVERSITY

JOHN A MERRITT BLVD
NASHVILLE, TN
SBC# 166/001-02-2011

PROJ. NO.: 2011171

DATE: 25 APRIL 2012

SITE DETAILS

C4.01

PLOT DATE: 4/24/2012 9:22:59 AM (GDODSON)
©COPYRIGHT 2012 - ALL RIGHTS RESERVED. NO PORTION(S) OF THIS DOCUMENT MAY BE REPRODUCED WITHOUT THE EXPRESSED WRITTEN CONSENT OF HART FREELAND ROBERTS, INC.

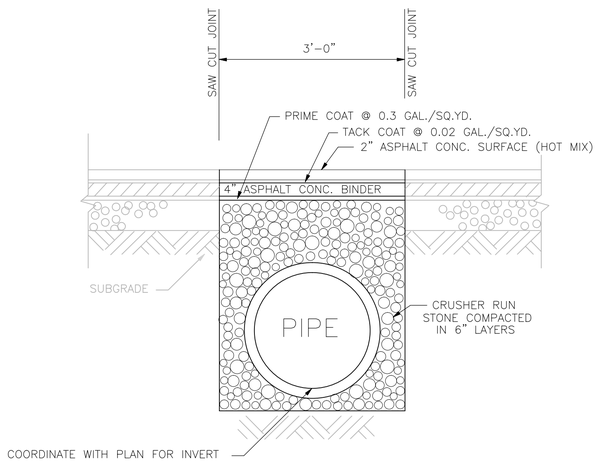

1 TRENCH REPAIR
NOT TO SCALE

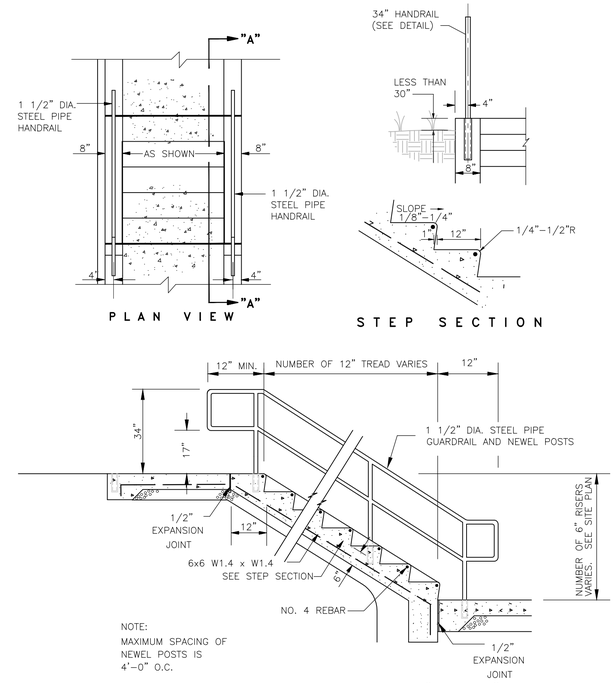

2 CONCRETE STEPS
NOT TO SCALE

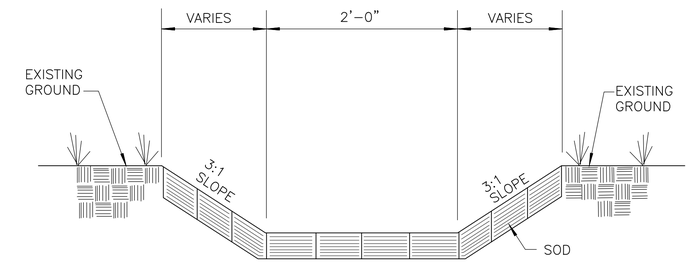

3 SODDED DITCH
NOT TO SCALE

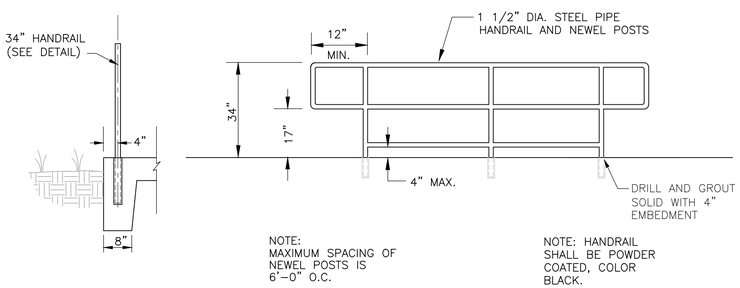

4 HANDRAIL
NOT TO SCALE

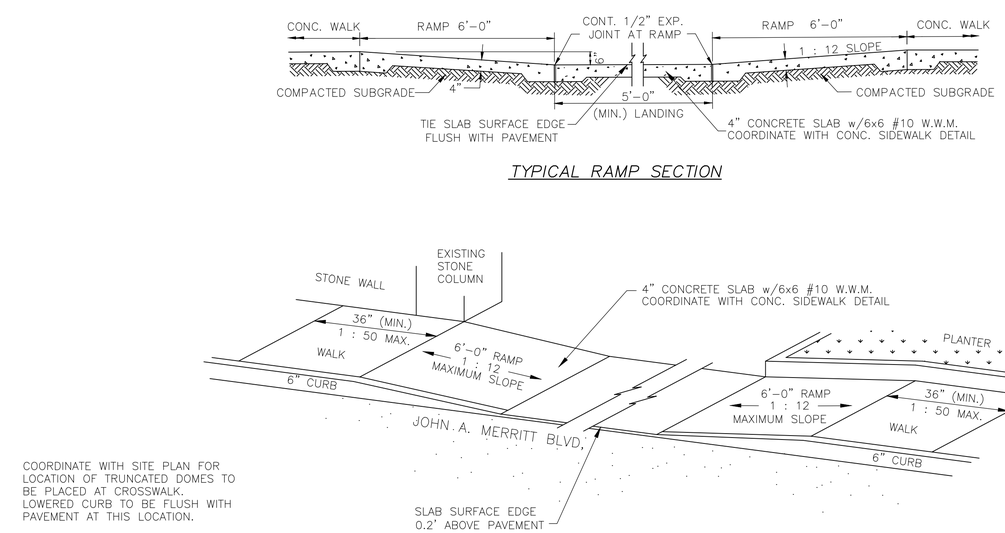

5 SOUTH PLAZA ENTRY RAMP
NOT TO SCALE

HFR DESIGN
1910
ARCHITECTURE
ENGINEERING
PLANNING
INTERIORS

HART FREELAND ROBERTS, INC.
7101 Executive Center Drive
Suite 300
Brentwood, TN 37024

615.370.8500 phone
615.370.8530 fax
www.hfrdesign.com web

Nashville, Tennessee
Jackson, Tennessee
Kansas City, Missouri
Louisville, Kentucky

JAMES H. GILLIAM III
REGISTERED ARCHITECT
No. 103759
STATE OF TENNESSEE
SIGNATURE
4/25/12

HALE STADIUM RENOVATIONS
NORTH AND SOUTH ENTRIES
TENNESSEE STATE UNIVERSITY
JOHN A MERRITT BLVD
NASHVILLE, TN
SBC# 166/001-02-2011

PROJ. NO.: 2011171

DATE: 25 APRIL 2012

SITE DETAILS

C4.02

PLOT DATE: 4/24/2012 9:24:43 AM (GDODSON)
©COPYRIGHT 2012 - ALL RIGHTS RESERVED. NO PORTION(S) OF THIS DOCUMENT MAY BE REPRODUCED WITHOUT THE EXPRESSED WRITTEN CONSENT OF HART FREELAND ROBERTS, INC.

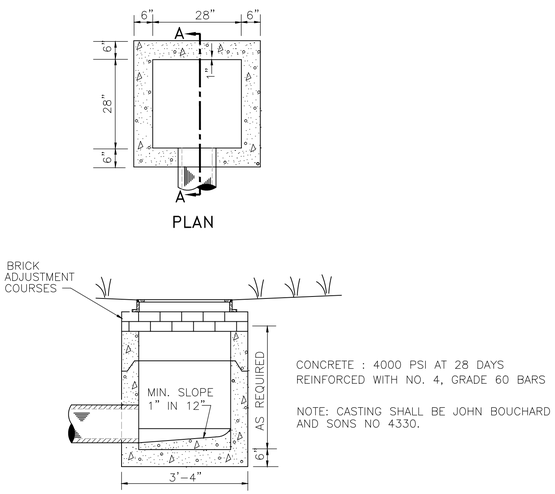

1 CATCH BASIN
NOT TO SCALE

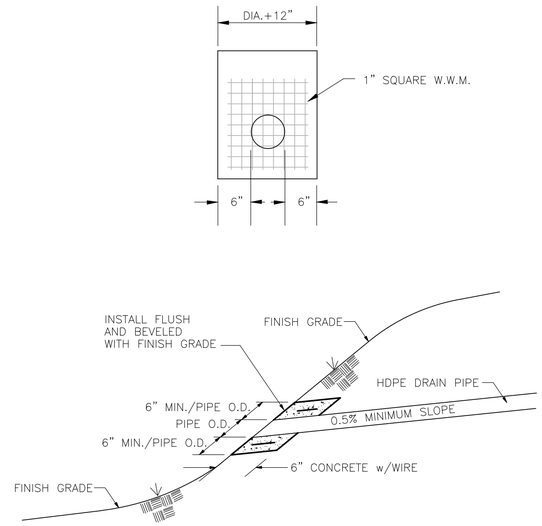

2 CONCRETE ENDWALL
NOT TO SCALE

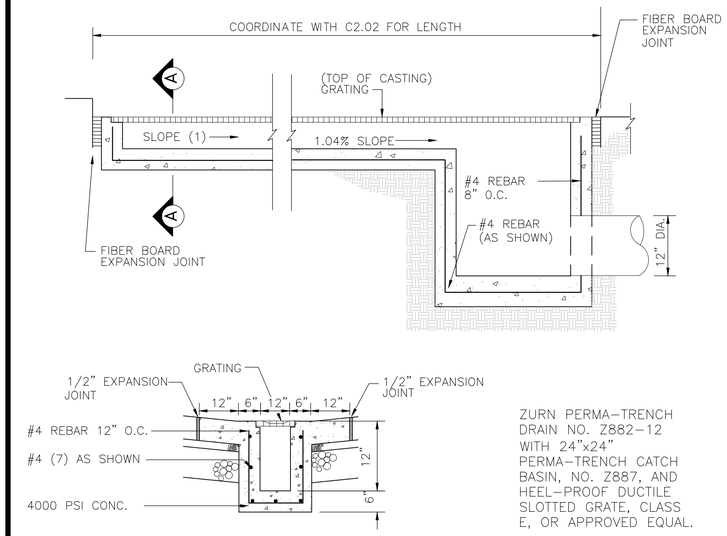

ZURN PERMA-TRENCH DRAIN NO. Z882-12 WITH 24"x24" PERMA-TRENCH CATCH BASIN, NO. Z887, AND HEEL-PROOF DUCTILE SLOTTED GRATE, CLASS E, OR APPROVED EQUAL.

(1) 104 LF OF TRENCH DRAIN SHALL BE NEUTRAL SLOPE, 8203N. INSTALLATION SHALL FOLLOW SLOPE OF EXISTING ASPHALT.

3 TRENCH DRAIN
NOT TO SCALE

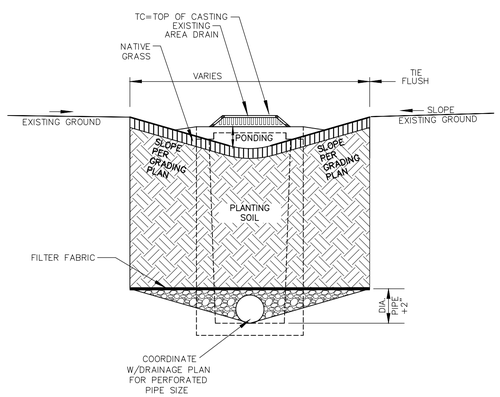

NOTES:

1. THE PLANTING SOIL BED SHOULD BE SANDY LOAM, LOAMY SAND OR LOAM MIXTURE WITH A CLAY CONTENT RANGING FROM 10 TO 25%. THE SOIL MUST HAVE A pH BETWEEN 5.5 AND 6.5. IN ADDITION, THE PLANTING SOIL SHOULD HAVE A 1.5 TO 3% ORGANIC CONTENT AND A MAXIMUM 500 ppm CONCENTRATION OF SOLUBLE SALTS.
2. THE UNDERDRAIN COLLECTION SYSTEM IS EQUIPPED WITH A 12" PERFORATED HDPE PIPE (AASHTO M 252) IN A 14" LAYER. THE PIPE SHOULD HAVE 3/8 PERFORATIONS, SPACED AT 6" CENTERS, WITH A MINIMUM OF 4 HOLES PER ROW. THE PIPE IS PLACED ON A MINIMUM GRADE OF 0.5%. A PERMEABLE FILTER FABRIC IS PLACED BETWEEN THE SOIL AND THE GRAVEL.
3. RAIN GARDEN SHALL BE PLANTED WITH NATIVE GRASSES.

4 RAIN GARDEN
NOT TO SCALE

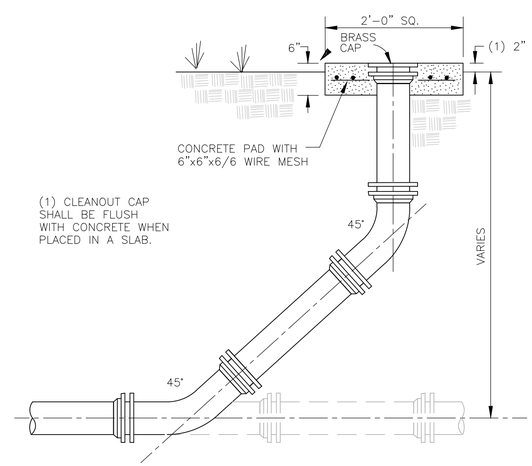

5 CLEANOUT
NOT TO SCALE

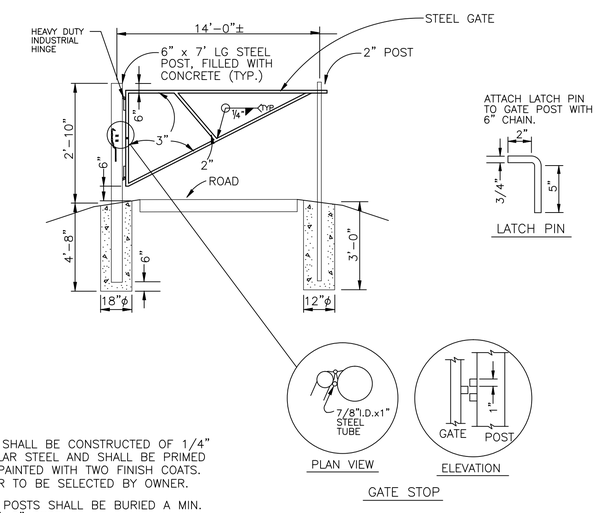

NOTES

1. GATE SHALL BE CONSTRUCTED OF 1/4" TUBULAR STEEL AND SHALL BE PRIMED AND PAINTED WITH TWO FINISH COATS. COLOR TO BE SELECTED BY OWNER.
2. GATE POSTS SHALL BE BURIED A MIN. OF 4'-0" DEEP.
3. INSTALL GATE AS SHOWN ON THE DRAWINGS. FIELD VERIFY GATE WIDTH PRIOR TO FABRICATION.
4. CONTRACTOR SHALL SUBMIT SHOP DRAWINGS FOR THE GATE PRIOR TO FABRICATION.
5. GATE SHALL SWING 180° SUCH THAT IT WILL ALIGN WITH HANDRAIL WHEN OPEN.

6 GATE
NOT TO SCALE

HFR DESIGN
1910
ARCHITECTURE
ENGINEERING
PLANNING
INTERIORS

HART FREELAND ROBERTS, INC.
7101 Executive Center Drive
Suite 300
Brentwood, TN 37024

615.370.8500 phone
615.370.8530 fax
www.hfrdesign.com web

Nashville, Tennessee
Jackson, Tennessee
Kansas City, Missouri
Louisville, Kentucky

JAMES H. GILLIAM III
REGISTERED ARCHITECT
ARCHITECTURE
COMMERCE
No. 103720
STATE OF TENNESSEE
4/25/12

HALE STADIUM RENOVATIONS
NORTH AND SOUTH ENTRIES
TENNESSEE STATE UNIVERSITY
JOHN A MERRITT BLVD
NASHVILLE, TN
SBC# 166/001-02-2011

PROJ. NO.: 2011171

DATE: 25 APRIL 2012

SITE DETAILS

C4.03

PLOT DATE: 4/24/2012 9:26:24 AM (GDODSON)
©COPYRIGHT 2012 - ALL RIGHTS RESERVED. NO PORTION(S) OF THIS DOCUMENT MAY BE REPRODUCED WITHOUT THE EXPRESSED WRITTEN CONSENT OF HART FREELAND ROBERTS, INC.

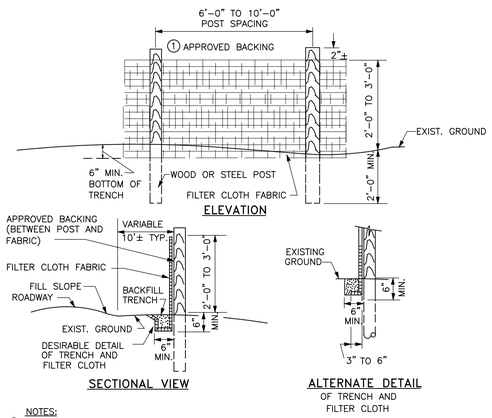

NOTES:

1. FILTER CLOTH SHALL HAVE APPROVED BACKING OR A BUILT-IN REINFORCED STRUCTURE, AS RECOMMENDED BY THE MANUFACTURER TO SUPPORT THE FILTER CLOTH
2. FILTER CLOTH SHALL MEET THE REQUIREMENTS OF STATE D.O.T. STANDARD SPECIFICATIONS
3. A PREASSEMBLED SILT FENCE MEETING THE REQUIRMENTS OF THIS DRAWING IS ACCEPTABLE IN LIEU OF A FIELD CONSTRUCTED SILT FENCE

1 TEMPORARY SILT FENCE
NOT TO SCALE

NOTES:

1. USE CLEAN 3/4 IN. (19 mm) GRAVEL OR APPROVED EQUAL.
2. PERIODICALLY CHANGE GRAVEL WITH NEW, CLEAN GRAVEL. OLD GRAVEL MAY BE USED AS BACKFILL MATERIAL IF APPROVED BY ENGINEER.

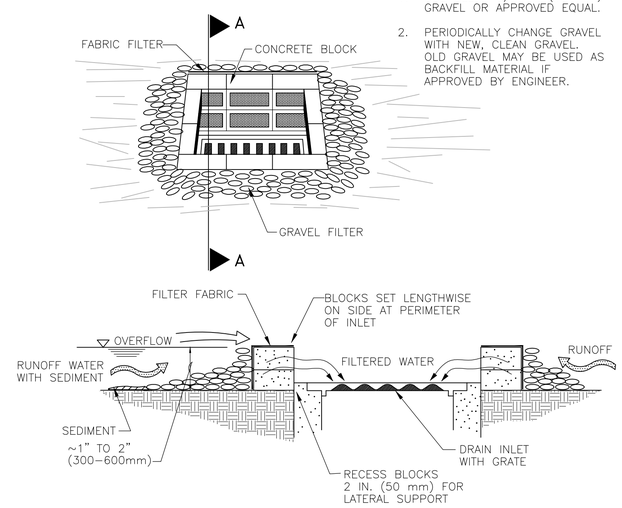

SECTION A-A

2 INLET PROTECTION
NOT TO SCALE

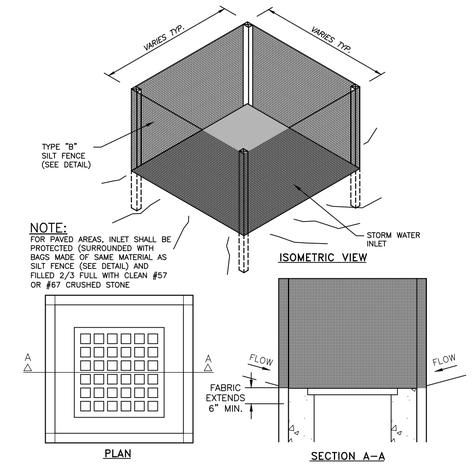

NOTE:
FOR PAVED AREAS, INLET SHALL BE PROTECTED (SURROUNDED WITH BAGS MADE OF SAME MATERIAL AS SILT FENCE (SEE DETAIL) AND FILLED 2/3 FULL WITH CLEAN #57 OR #67 CRUSHED STONE

3 INLET PROTECTION
NOT TO SCALE

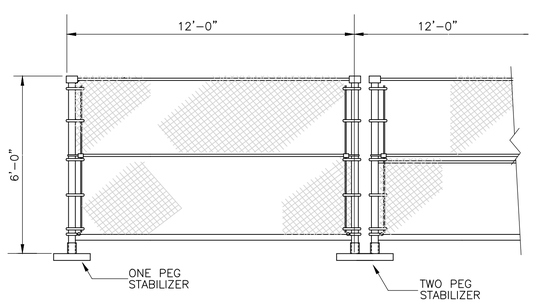

4 CONSTRUCTION FENCE
NOT TO SCALE

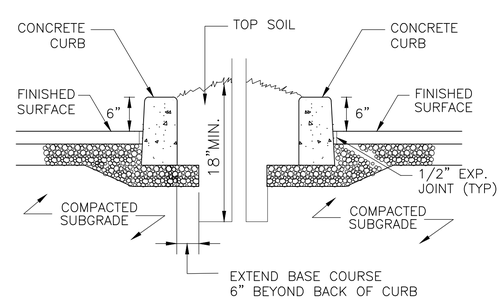

5 LANDSCAPE/PLANTER
NOT TO SCALE

6 DETAIL
NOT TO SCALE

HFR DESIGN
1910
ARCHITECTURE
ENGINEERING
PLANNING
INTERIORS

HART FREELAND ROBERTS, INC.
7101 Executive Center Drive
Suite 300
Brentwood, TN 37024

615.370.8500 phone
615.370.8530 fax
www.hfrdesign.com web

Nashville, Tennessee
Jackson, Tennessee
Kansas City, Missouri
Louisville, Kentucky

JAMES H. GILLIAM III
REGISTERED ARCHITECT
No. 10372
STATE OF TENNESSEE
4/25/12

HALE STADIUM RENOVATIONS
NORTH AND SOUTH ENTRIES
TENNESSEE STATE UNIVERSITY
JOHN A MERRITT BLVD
NASHVILLE, TN
SBC# 166/001-02-2011

PROJ. NO.: 2011171

DATE: 25 APRIL 2012

SITE
DETAILS

C4.04

PLOT DATE: 4/24/2012 9:30:12 AM (GDODSON)
©COPYRIGHT 2012 - ALL RIGHTS RESERVED. NO PORTION(S) OF THIS DOCUMENT MAY BE REPRODUCED WITHOUT THE EXPRESSED WRITTEN CONSENT OF HART FREELAND ROBERTS, INC.

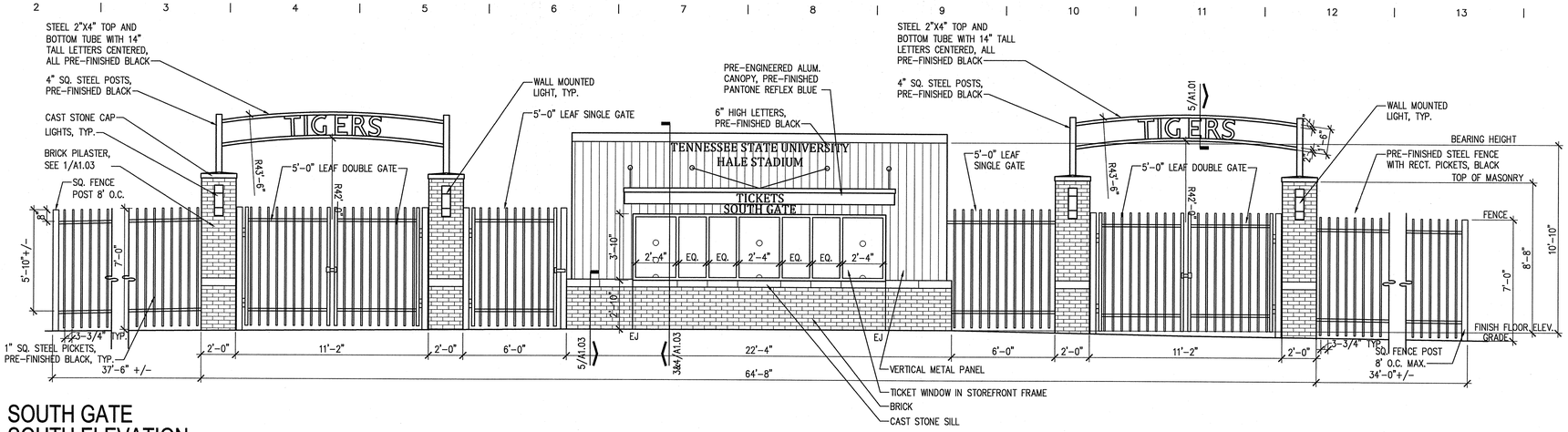

1 SOUTH GATE SOUTH ELEVATION

1/4" = 1'-0"

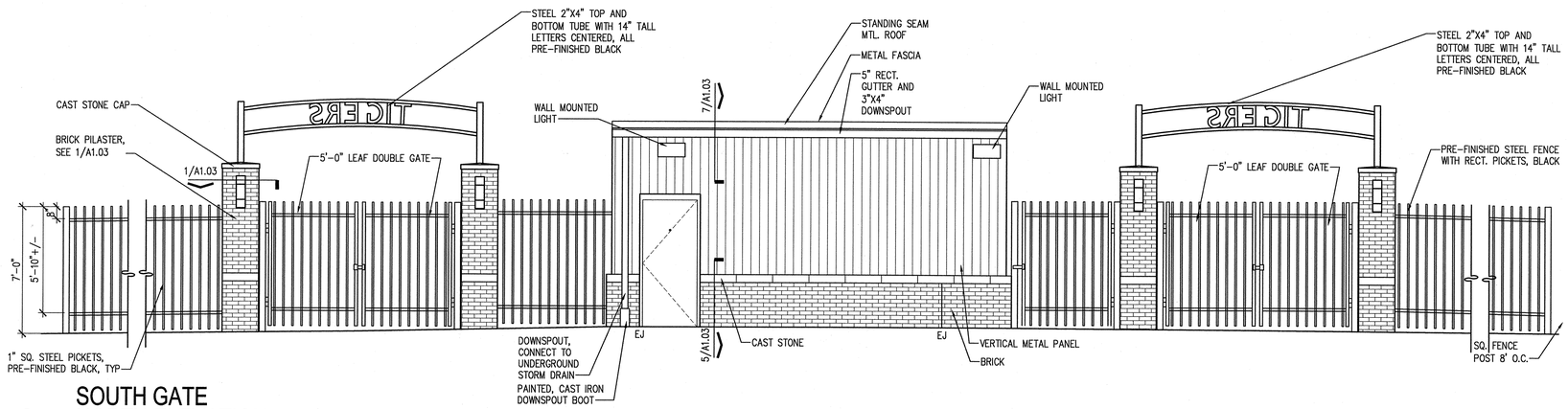

2 SOUTH GATE NORTH ELEVATION

1/4" = 1'-0"

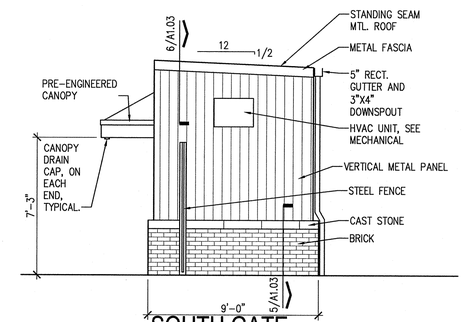

3 SOUTH GATE EAST ELEVATION

1/4" = 1'-0"

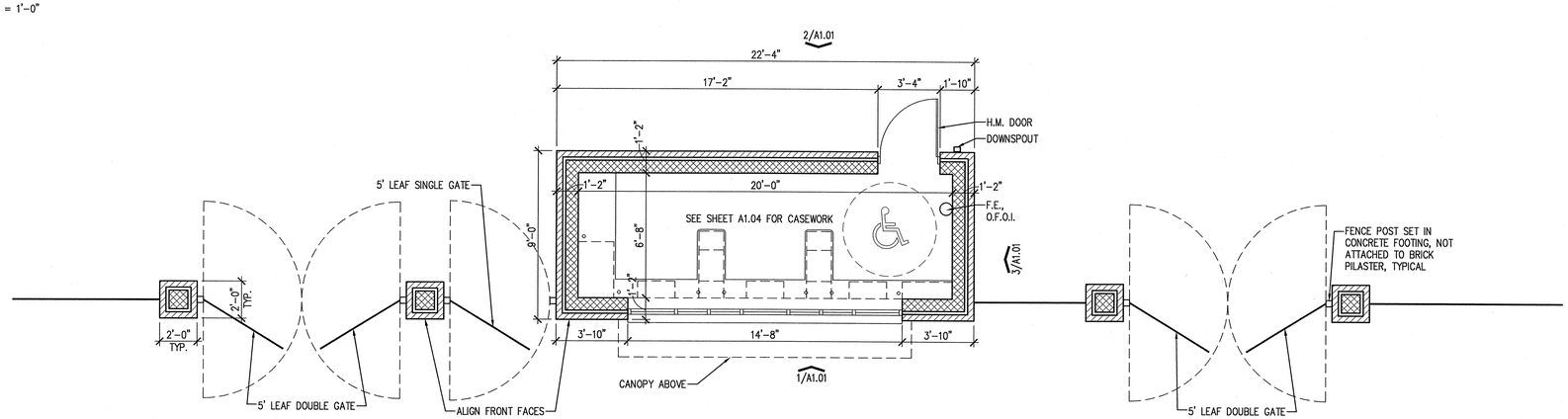

4 SOUTH GATE FLOOR PLAN

1/4" = 1'-0"

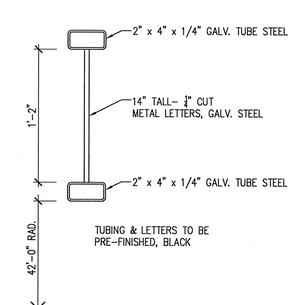

5 TYP. GATE ARCH DETAIL

1-1/2" = 1'-0"

HFR DESIGN
ARCHITECTURE
ENGINEERING
PLANNING
INTERIORS

HART FREELAND ROBERTS, INC.
7101 Executive Center Drive
Suite 300
Brentwood, TN 37024
615.370.8500 phone
615.370.8530 fax
www.hfrdesign.com web
Nashville, Tennessee
Jackson, Tennessee
Kansas City, Missouri
Louisville, Kentucky

STEPHEN P. GRAHAM REGISTERED ARCHITECT AGRICULTURE NO. 12250 STATE OF TENNESSEE 4-25-2012

HALE STADIUM RENOVATIONS NORTH AND SOUTH ENTRIES TENNESSEE STATE UNIVERSITY

JOHN A MERRITT BLVD
NASHVILLE, TN
SBC# 166/001-02-2011

PROJ. NO.: 2011171
DATE: 25 APRIL 2012

SOUTH PLAZA GATE

A
1.01

PLOT DATE: 4/23/2012 3:40:26 PM (BMALONE)
©COPYRIGHT 2012. ALL RIGHTS RESERVED. NO PORTION(S) OF THIS DOCUMENT MAY BE REPRODUCED WITHOUT THE EXPRESSED WRITTEN CONSENT OF HART FREELAND ROBERTS, INC.

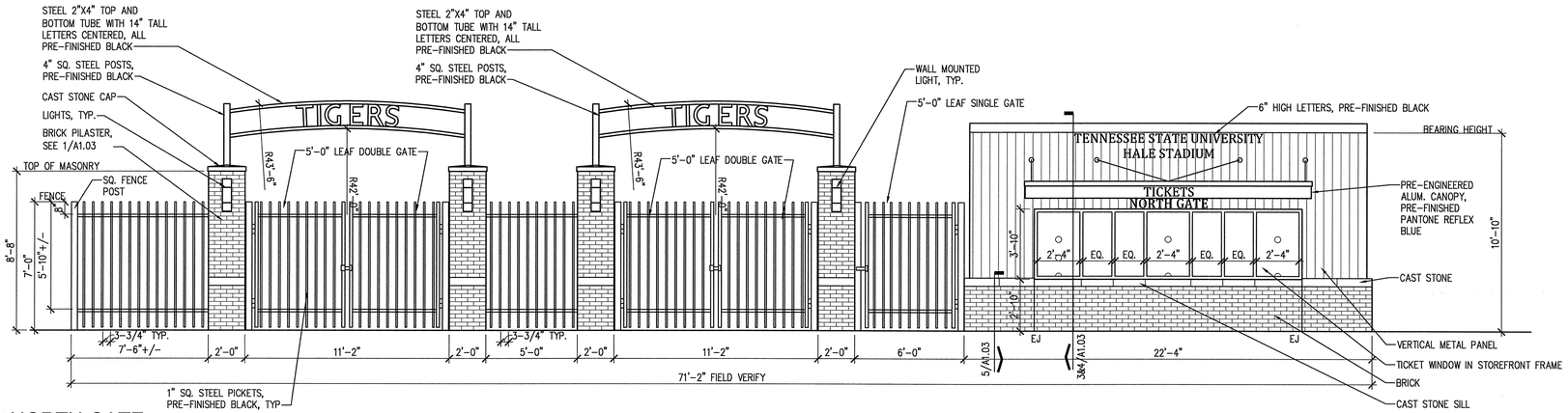

1 NORTH GATE NORTH ELEVATION

1/4" = 1'-0"

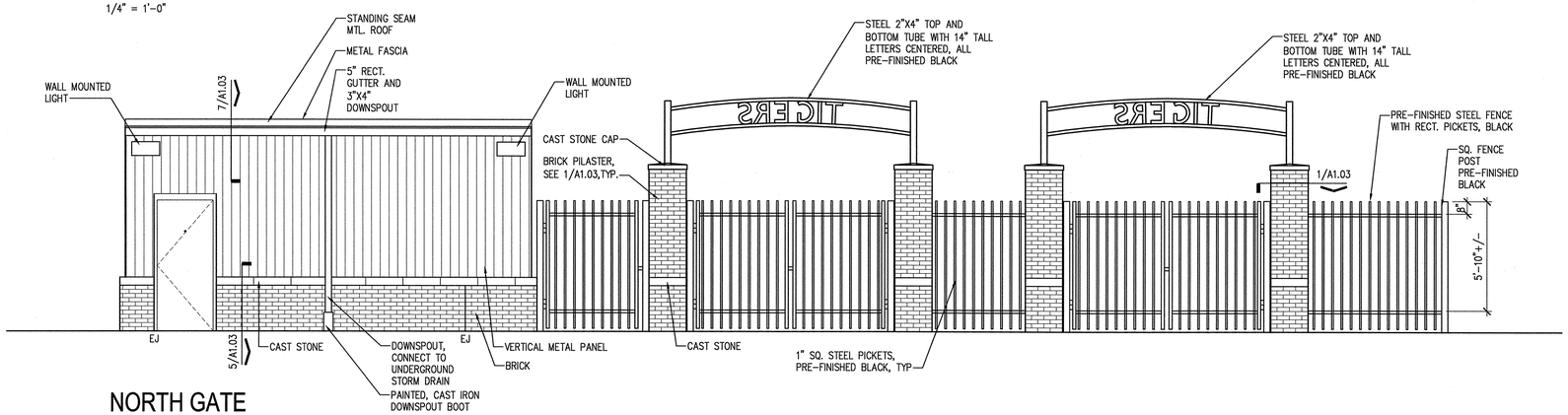

2 NORTH GATE SOUTH ELEVATION

1/4" = 1'-0"

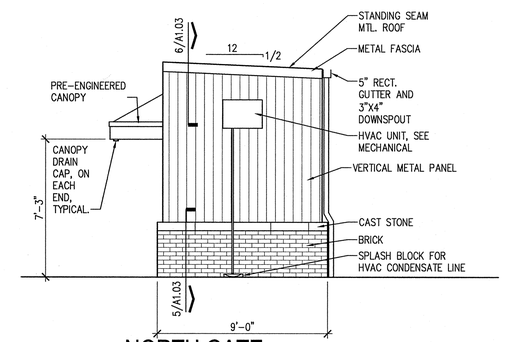

3 NORTH GATE WEST ELEVATION

1/4" = 1'-0"

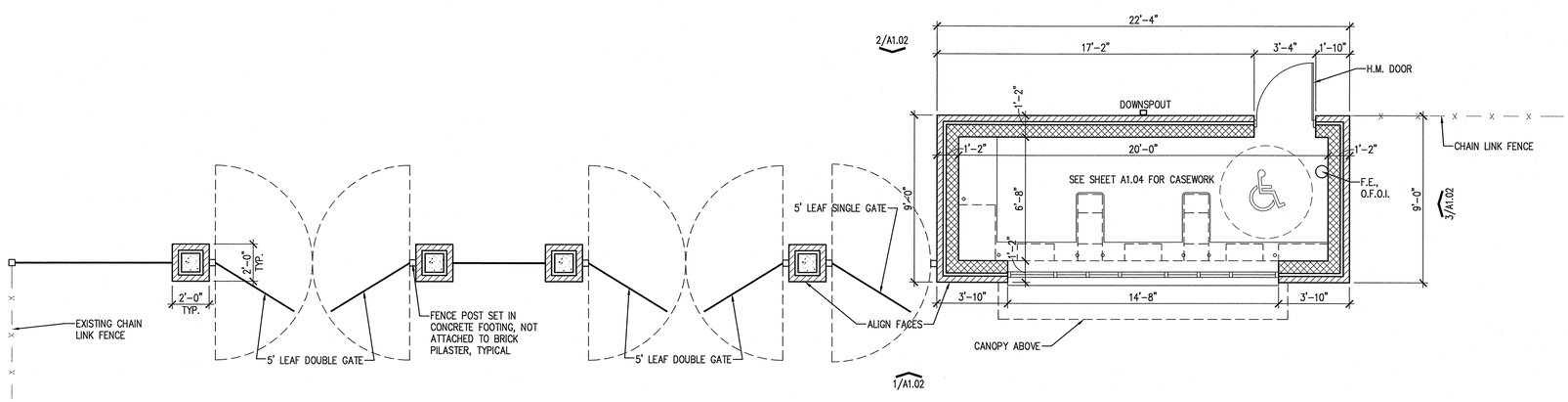

4 NORTH GATE FLOOR PLAN

1/4" = 1'-0"

PLOT DATE: 4/23/2012 3:46:02 PM (MALONE)
©COPYRIGHT 2012 - ALL RIGHTS RESERVED. NO PORTION(S) OF THIS DOCUMENT MAY BE REPRODUCED WITHOUT THE EXPRESSED WRITTEN CONSENT OF HART FREELAND ROBERTS, INC.

HFR DESIGN
ARCHITECTURE
ENGINEERING
PLANNING
INTERIORS

HART FREELAND ROBERTS, INC.
7101 Executive Center Drive
Suite 300
Brentwood, TN 37024

615.370.8500 phone
615.370.8530 fax
www.hfrdesign.com web

Nashville, Tennessee
Jackson, Tennessee
Kansas City, Missouri
Louisville, Kentucky

STEPHEN R. GALLIMORE
REGISTERED ARCHITECT
AGRICULTURE COMMERCE
No. 12250
STATE OF TENNESSEE
4-23-2012

HALE STADIUM RENOVATIONS NORTH AND SOUTH ENTRIES TENNESSEE STATE UNIVERSITY

JOHN A MERRITT BLVD
NASHVILLE, TN
SBC# 166/001-02-2011

PROJ. NO.: 2011171

DATE: 25 APRIL 2012

NORTH PLAZA GATE

A
1.02

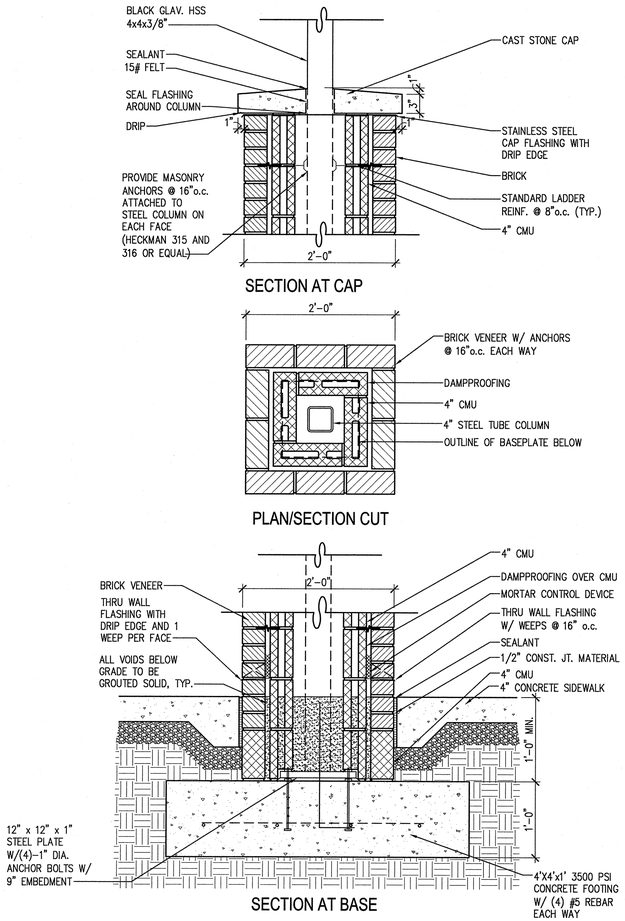

1 BRICK COLUMN DETAIL

0 4" 8" 12"
1" = 1'-0"

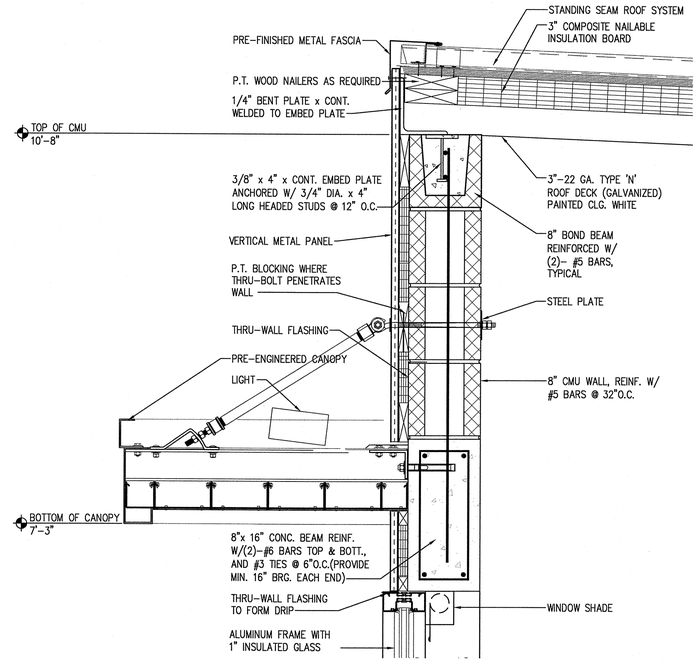

4 WALL SECTION

0 2" 4" 6" 1'
1-1/2" = 1'-0"

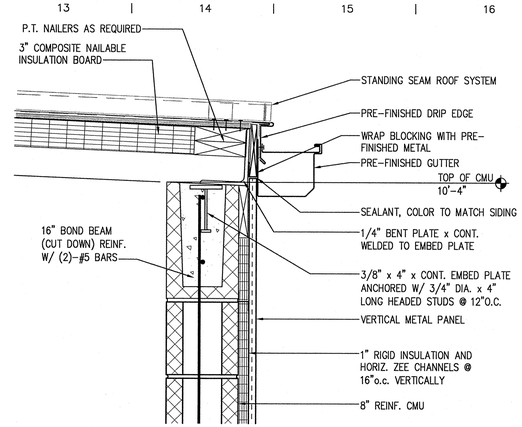

7 ROOF DETAIL

0 2" 4" 6" 1'
1-1/2" = 1'-0"

2 CANOPY DETAILS

0 4" 8" 12"
1" = 1'-0"

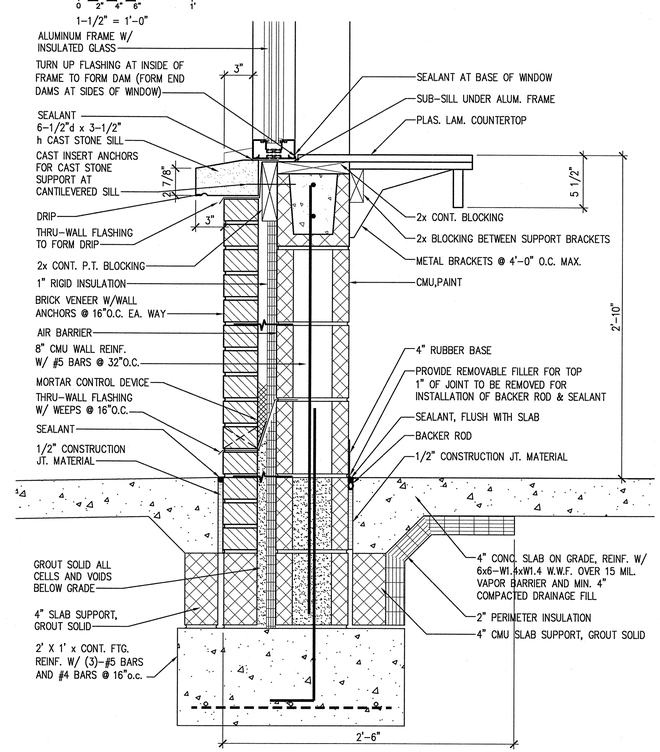

3 WALL SECTION

0 2" 4" 6" 1'
1-1/2" = 1'-0"

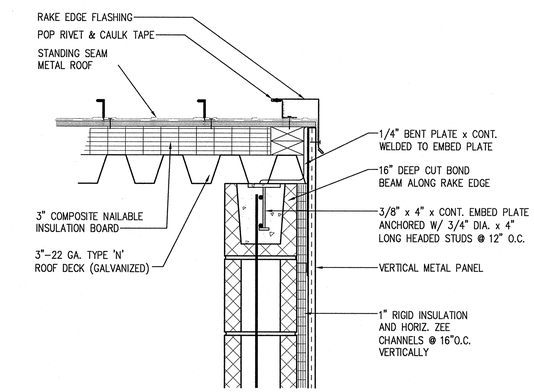

6 ROOF RAKE EDGE DETAIL

0 2" 4" 6" 1'
1-1/2" = 1'-0"

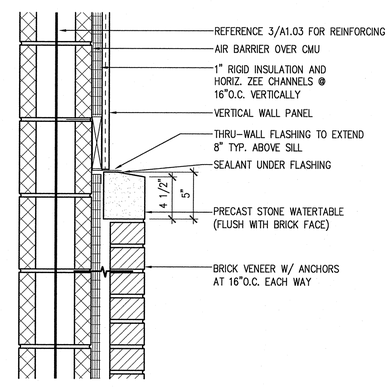

5 WATERTABLE DETAIL

0 2" 4" 6" 1'
1-1/2" = 1'-0"

HFR DESIGN
1910
ARCHITECTURE
ENGINEERING
PLANNING
INTERIORS

HART FREELAND ROBERTS, INC.
7101 Executive Center Drive
Suite 300
Brentwood, TN 37024
615.370.8500 phone
615.370.8530 fax
www.hfrdesign.com web
Nashville, Tennessee
Jackson, Tennessee
Kansas City, Missouri
Louisville, Kentucky

STEPHEN P. GRIFFIN REGISTERED ARCHITECT AGRICULTURE NO. 12250 STATE OF TENNESSEE 4-25-2012

HALE STADIUM RENOVATIONS
NORTH AND SOUTH ENTRIES
TENNESSEE STATE UNIVERSITY
JOHN A MERRITT BLVD
NASHVILLE, TN
SBC# 166/001-02-2011

PROJ. NO.: 2011171
DATE: 25 APRIL 2012

DETAILS

A
1.03

PLOT DATE: 4/23/2012 3:02:47 PM (BMALONE)
©COPYRIGHT 2012 - ALL RIGHTS RESERVED. NO PORTION(S) OF THIS DOCUMENT MAY BE REPRODUCED WITHOUT THE EXPRESSED WRITTEN CONSENT OF HART FREELAND ROBERTS, INC.

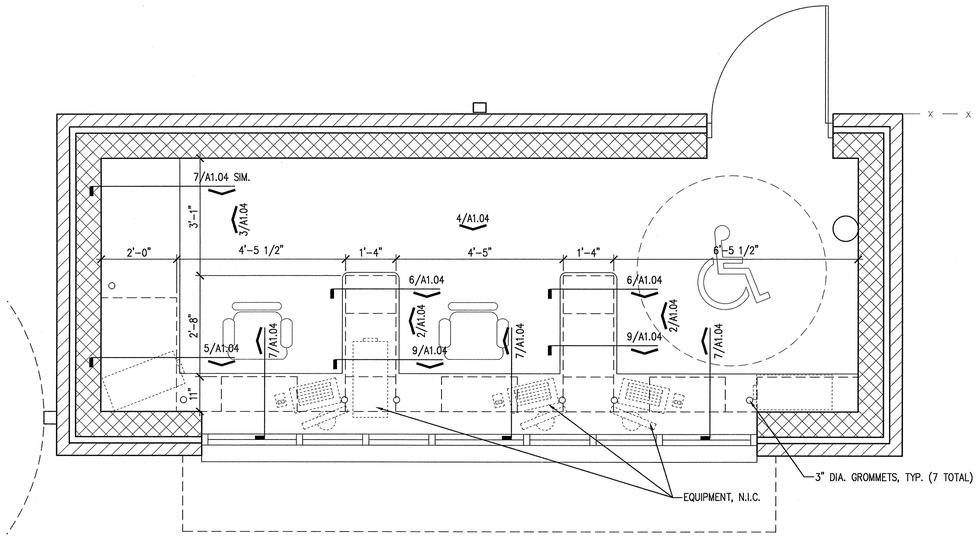

1 TICKET BOOTH PLAN, TYP.

1/2" = 1'-0"

DOOR SCHEDULE:
- 3'-0" X 7'-0" H. METAL, FLUSH, INSULATED, PEEP HOLE
- PROVIDE WEATHER STRIPPING, THRESHOLD
- REFER TO SPEC SECTION 087100 FOR HARDWARE
- H. METAL FRAME; SEE DETAILS THIS SHEET

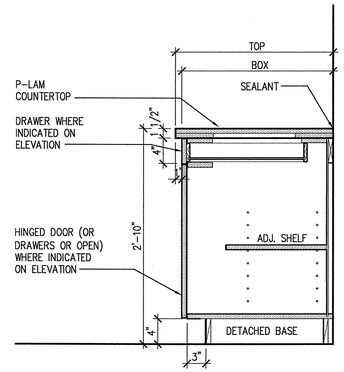

5 CASEWORK SECTION

1" = 1'-0"

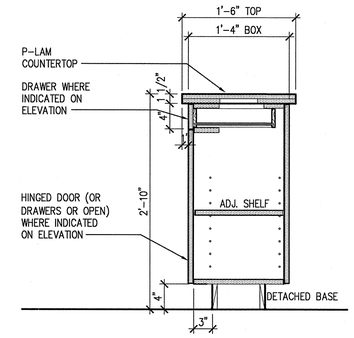

6 CASEWORK SECTION

1" = 1'-0"

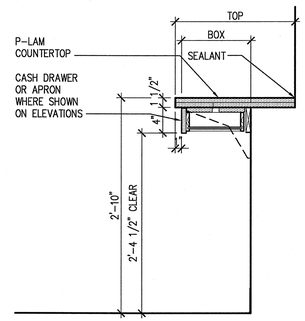

7 CASEWORK SECTION

1" = 1'-0"

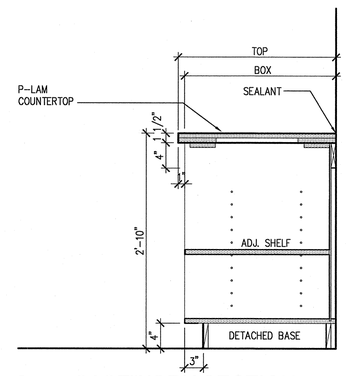

8 CASEWORK SECTION

1" = 1'-0"

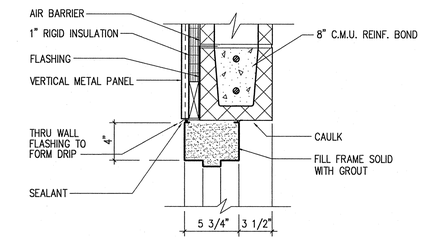

10 DOOR HEAD DETAIL

1-1/2" = 1'-0"

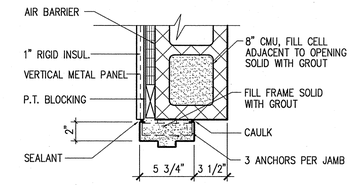

11 UPPER DOOR JAMB DETAIL

1-1/2" = 1'-0"

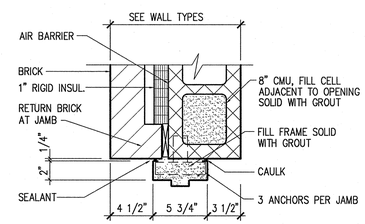

12 LOWER DOOR JAMB DETAIL

1-1/2" = 1'-0"

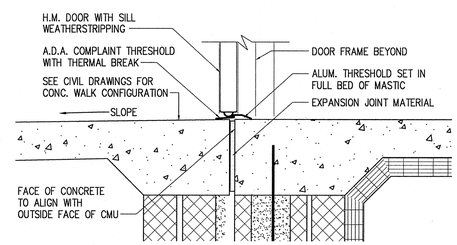

13 DOOR SILL DETAIL

1-1/2" = 1'-0"

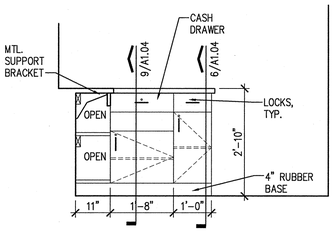

2 CASEWORK ELEVATION

1/2" = 1'-0"

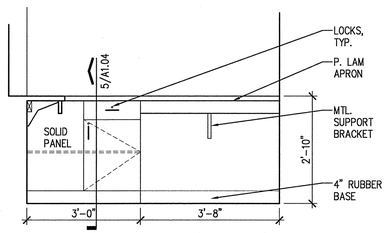

3 CASEWORK ELEVATION

1/2" = 1'-0"

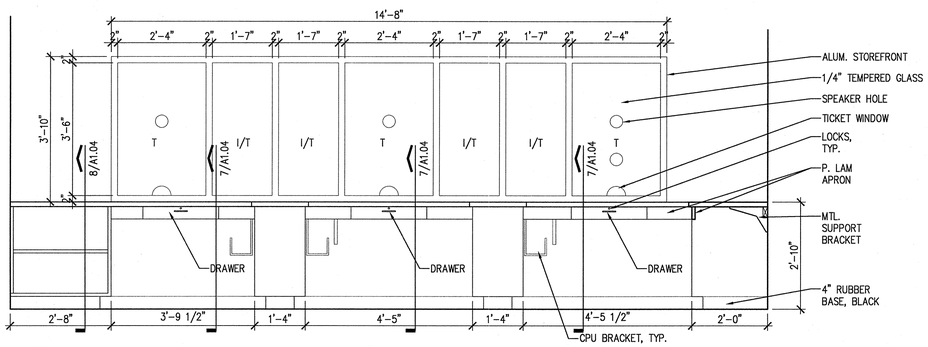

I/T = INSULATED, TEMPERED GLASS
T = 1/4" TEMPERED GLASS

4 CASEWORK ELEVATION

1/2" = 1'-0"

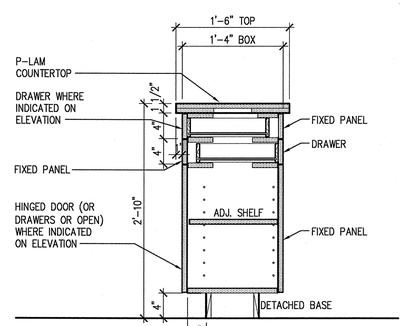

9 CASEWORK SECTION

1" = 1'-0"

PLOT DATE: 4/23/2012 3:03:04 PM (BMALONE)
COPYRIGHT 2012 - ALL RIGHTS RESERVED. NO PORTION(S) OF THIS DOCUMENT MAY BE REPRODUCED WITHOUT THE EXPRESSED WRITTEN CONSENT OF HART FREELAND ROBERTS, INC.

HFR DESIGN
1910
ARCHITECTURE
ENGINEERING
PLANNING
INTERIORS

HART FREELAND ROBERTS, INC.
7101 Executive Center Drive
Suite 300
Brentwood, TN 37024
615.370.8500 phone
615.370.8530 fax
www.hfrdesign.com web
Nashville, Tennessee
Jackson, Tennessee
Kansas City, Missouri
Louisville, Kentucky

STEPHEN P. GRAHAM
REGISTERED ARCHITECT
AGRICULTURE
No. 12250
STATE OF TENNESSEE
4-27-2012

HALE STADIUM RENOVATIONS
NORTH AND SOUTH ENTRIES
TENNESSEE STATE UNIVERSITY
JOHN A MERRITT BLVD
NASHVILLE, TN
SBC# 166/001-02-2011

PROJ. NO.: 2011171
DATE: 25 APRIL 2012

DETAILS

A
1.04

THROUGH THE WALL HP UNIT SCHEDULE

UNIT NO.	HP-1	
MANUFACTURER (BOD)	AMANA	
TYPE	(A)	
MODEL	PBH113	
COOLING CAPACITY		
TOTAL MBH	11,500	
SENSIBLE MBH	----	
E.A.T. DB/WB °F	80/67	
O.A.T. DB °F	95	
INDOOR UNIT		
FAN		
TOTAL CFM	265	
O.A. CFM	30	
ESP IN WG	----	
DIMENSIONS (LxDxH)	25x25x16	
AUX. ELECT. HT	3KW	
ELECTRICAL (6)	240-1	
FAN FLA	----	
MCA	----	
MOCP	6-20P	
ACCESSORIES	(1) THRU (7)	

REMARKS:

(A) THROUGH THE WALL HEAT PUMP UNIT.

(1) POWER CORD FOR CONNECTION TO 6-20P OUTLET.

(2) 5 YEAR COMPRESSOR WARRANTY.

(3) INSULATED METAL WALL SLEEVE.

(4) EXTERNAL CONDENSATE DRAIN ON WALL SLEEVE.

(5) ARCHITECTURAL GRILLE OF CUSTOM COLOR SELECTED BY ARCHITECT.

(6) FRESH AIR DAMPER SET FOR 30 CFM FRESH AIR.

(7) DIGITAL CONTROL PANEL WITH TEMP SETPOINT REMOTE CONTROLLER.

MECHANICAL GENERAL NOTES:

1. DRAWINGS ARE DIAGRAMMATIC AND INDICATE GENERAL ARRANGEMENT OF SYSTEMS. DRAWINGS SHALL NOT BE SCALED.

2. CONTRACTOR SHALL FIELD VERIFY BY MEASUREMENT THE EXACT LOCATION OF EQUIPMENT, DUCTWORK, PIPING, STRUCTURE, AND OTHER CONDITIONS WHICH WILL AFFECT INSTALLATION. CONTRACTOR SHALL LOCATE EQUIPMENT AND ROUTE DUCTWORK AND PIPING TO AVOID CONFLICTS AND INTERFERENCES WITH FIELD CONDITIONS.

3. PRIOR TO ANY INSTALLATION, CLOSELY COORDINATE ALL MECHANICAL WORK WITH PLUMBING, FIRE PROTECTION, ELECTRICAL, ARCHITECTURAL, AND STRUCTURAL WORK. CONTRACTOR TO ENSURE ALL EQUIPMENT AND SERVICES WILL FIT IN AVAILABLE SPACES ALLOWING CEILING HEIGHTS INDICATED ON ARCHITECTURAL PLANS. INSTALL EQUIPMENT SO AS TO PROVIDE CLEARANCES SHOWN ON DRAWINGS AND AS RECOMMENDED BY MANUFACTURER FOR AIRFLOW, SERVICE, MAINTENANCE, AND FILTER REMOVAL AS APPLICABLE.

4. COORDINATE DUCT, PIPING, AND EQUIPMENT LOCATIONS WITH ELECTRICAL PANEL LOCATIONS. DO NOT PASS ANY MECHANICAL OR PLUMBING ITEMS DIRECTLY OVER ELECTRICAL PANELS. SEE ELECTRICAL DRAWINGS FOR EXACT PANEL LOCATIONS.

5. ALL EXPOSED DUCTWORK, PIPING, AND EQUIPMENT IN FINISHED SPACES TO BE INSTALLED AS HIGH AS POSSIBLE ABOVE FINISHED FLOOR.

6. ALL MANUFACTURER'S LISTED ARE BASIS OF DESIGN (BOD) ONLY AND ARE NOT INTENDED TO ELIMINATE EQUIPMENT SUBSTITUTIONS. SEE SPECIFICATIONS FOR ALTERNATE MANUFACTURER'S.

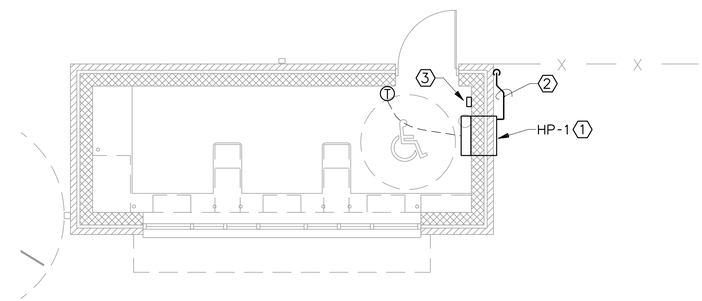

MECHANICAL - NORTH GATE FLOOR PLAN

0 2' 4' 6'
1/4" = 1'-0"

NOTES (1):

(1) MOUNT HP SO BOTTOM ELEVATION IS 7'-6" ABOVE FINISHED FLOOR. COORDINATE WITH ARCHITECTURAL ELEVATIONS.

(2) ROUTE CONNECTION SIZE PVC CONDENSATE DRAIN TO NEAREST GUTTER. PAINT PIPE TO MATCH BUILDING.

(3) UNIT COMES WITH REMOTE CONTROL. PROVIDE MEANS TO HOLD REMOTE CONTROLLER.

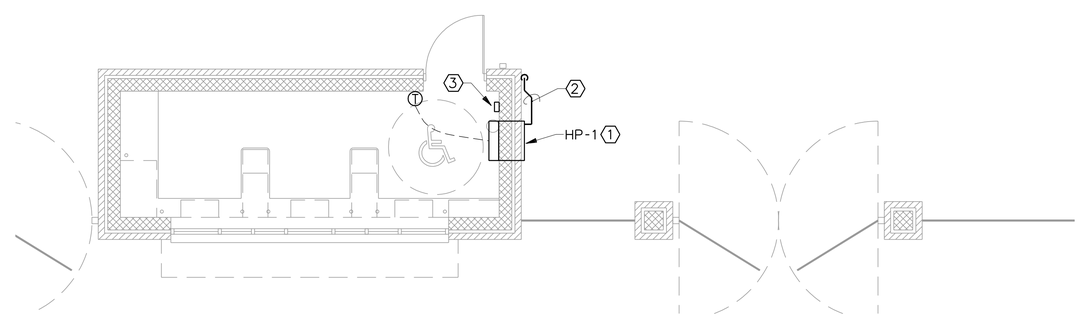

MECHANICAL - SOUTH GATE FLOOR PLAN

0 2' 4' 6'
1/4" = 1'-0"

I.C. Thomason Associates, Inc.
CONSULTING ENGINEERS
2950 KRAFT DRIVE, SUITE 500
NASHVILLE, TENNESSEE 37204
PHONE (615) 346-3400
FAX (615)346-3550
ICT PROJECT No. 110477

HFR DESIGN
1910
ARCHITECTURE
ENGINEERING
PLANNING
INTERIORS

HART FREELAND ROBERTS, INC.
7101 Executive Center Drive
Suite 300
Brentwood, TN 37024
615.370.8500 phone
615.370.8530 fax
www.hfrdesign.com web
Nashville, Tennessee
Jackson, Tennessee
Kansas City, Missouri
Louisville, Kentucky

DAVID BRIAN PEEL
REGISTERED ARCHITECT
NO. 10981
STATE OF TENNESSEE
4/19/12

HALE STADIUM RENOVATIONS NORTH AND SOUTH ENTRIES TENNESSEE STATE UNIVERSITY

JOHN A MERRITT BLVD
NASHVILLE, TN
SBC# 166/001-02-2011

PROJ. NO.: 2011171

DATE: 25 APRIL 2012

MECHANICAL-FLOOR PLANS

M
1.01

© COPYRIGHT — ALL RIGHTS RESERVED. NO PORTION(S) OF THIS DOCUMENT MAY BE REPRODUCED WITHOUT THE EXPRESSED WRITTEN CONSENT OF HART FREELAND ROBERTS, INC.

TBS PANEL SCHEDULE

120 /240 VOLT, 1 PHASE, 3 WIRE, 10 KA INT. RATING
60 AMP X MCB __ MLO __ SURFACE X FLUSH

NOTE! UNLESS OTHERWISE NOTED ALL BREAKERS TO BE 20A., 1P. WITH #12 CONDUCTORS. EXCEPT WHERE BRANCH CIRCUIT IS IN EXCESS OF 90 LINEAR FEET CONDUCTORS TO BE #10 AND OVER 175 LINEAR FEET CONDUCTORS TO BE #8.

CONNECTED LOAD (KVA): 6.75

SYSTEM AVAILABLE FAULT CURRENT:

REMARKS: SERVICE ENTRANCE RATED

DESCRIPTION	KVA PER PHASE A	KVA PER PHASE B	CKT NO	BREAKER AMP	BREAKER POLE	BREAKER POLE	BREAKER AMP	CKT NO	KVA PER PHASE A	KVA PER PHASE B	DESCRIPTION
LTG - TICKET BOOTH	.15		1					2	.36		REC. - TICKET BOOTH
LTG - EXTERIOR		.32	3					4		.54	REC. - TICKET BOOTH
LTG - EXTERIOR	.60		5					6	.36		REC. - EXTERIOR
PHOTOCELL		.20	7			2	20	8		1.75	HP-1
SPARE			9					10	1.75		
			11					12			SPARE
			13					14			
			15					16		.36	REC. - EXTERIOR
			17					18	.36		REC. - EXTERIOR
			19					20			SPARE
			21					22			
			23					24			
			25					26			
			27					28			
			29					30			
			31					32			
			33					34			
			35					36			
			37					38			
			39					40			
			41					42			
TOTALS:											:TOTALS

TBN PANEL SCHEDULE

120 /240 VOLT, 1 PHASE, 3 WIRE, 10 KA INT. RATING
60 AMP X MCB __ MLO __ SURFACE X FLUSH

NOTE! UNLESS OTHERWISE NOTED ALL BREAKERS TO BE 20A., 1P. WITH #12 CONDUCTORS. EXCEPT WHERE BRANCH CIRCUIT IS IN EXCESS OF 90 LINEAR FEET CONDUCTORS TO BE #10 AND OVER 175 LINEAR FEET CONDUCTORS TO BE #8.

CONNECTED LOAD (KVA): 5.43

SYSTEM AVAILABLE FAULT CURRENT:

REMARKS: SERVICE ENTRANCE RATED

DESCRIPTION	KVA PER PHASE A	KVA PER PHASE B	CKT NO	BREAKER AMP	BREAKER POLE	BREAKER POLE	BREAKER AMP	CKT NO	KVA PER PHASE A	KVA PER PHASE B	DESCRIPTION
LTG - TICKET BOOTH	.15		1					2	.36		REC. - TICKET BOOTH
LTG - EXTERIOR		.32	3					4		.54	REC. - TICKET BOOTH
SPARE			5					6	.18		REC. - EXTERIOR
PHOTOCELL		.2	7			2	20	8		1.75	HP-1
SPARE			9					10	1.75		
			11					12			SPARE
			13					14			
			15					16		.36	REC. - EXTERIOR
			17					18	.36		REC. - EXTERIOR
			19					20			SPARE
			21					22			
			23					24			
			25					26			
			27					28			
			29					30			
			31					32			
			33					34			
			35					36			
			37					38			
			39					40			
			41					42			
TOTALS:											:TOTALS

ELECTRICAL LEGEND

SYMBOL	DESCRIPTION	MOUNTING HEIGHT TO CENTERLINE UON
	CONDUIT CONCEALED IN FLOOR, WALL OR CEILING	
	CONDUIT CONCEALED BELOW GRADE ON SITE PLAN	
	CONDUIT EXPOSED ON WALL OR CEILING	
	HOMERUN CONDUIT	
	CONDUIT TURNING UP	
	CONDUIT TURNING DOWN	
	SURFACE MOUNTED WALL LIGHT FIXTURE ON NORMAL BRANCH CIRCUIT	
	WALL BRACKET FIXTURE CONNECTED TO NORMAL BRANCH CIRCUIT	
S_T	THERMAL MOTOR SWITCH-(FBE)	48"
S_M	MOTION SENSOR SWITCH - DUAL TECHNOLOGY	48"
S_{TP}	THERMAL MOTOR SWITCH, WITH PILOT LIGHT (FBE)	48"
S_{TWP}	THERMAL MOTOR SWITCH, WEATHERPROOF-(FBE)	48"
	FACTORY WIRED CONTROLLER OR EQUIPMENT CONNECTION, FBO.(DISCONNECTS FBE AS REQUIRED)	
	MOTOR CONTROLLER OR CONTACTOR	
	COMBINATION MOTOR STARTER DISCONNECT	
	DISCONNECT SWITCH, NON-FUSIBLE	
	DISCONNECT SWITCH, FUSIBLE	
3R	DISCONNECT SWITCH, NON-FUSIBLE NEMA-3R	
3R	DISCONNECT SWITCH, FUSIBLE NEMA-3R	
	MOTOR CONNECTION WITH APPROXIMATE HORSE-POWER SHOWN	
	JUNCTION BOX	
PB	PULL BOX	
	PANELBOARD	
MSB	MAIN SWITCHBOARD	
	ENCLOSED CIRCUIT BREAKER	
	SINGLE RECEPTACLE, AMPERAGE, VOLTAGE, NEMA CONFIGURATION AS REQUIRED BY EQUIP. SUPPLIER OR AS NOTED	18"
	120V. DUPLEX RECEPTACLE (IVORY)	18"
	120V. DUPLEX RECEPTACLE ABOVE COUNTER (IVORY)	AS SPECIFIED
TV	120V. DUPLEX RECEPTACLE FOR TV POWER (IVORY) ✳ COORDINATE MOUNTING HEIGHT WITH T001.	AS NOTED
	120V. QUADRAPLEX RECEPTACLE-(IVORY)	18"
	120V. QUADRAPLEX RECEPTACLE-(IVORY)	AS SPECIFIED
S	120V. DUPLEX RECEPTACLE-SAFETY TYPE-(IVORY)	18"
S	120V. DUPLEX RECEPTACLE-SAFETY TYPE-(IVORY)	AS SPECIFIED
T	SINGLE RECEPTACLE-TWISTLOCK TYPE (120V.-20A. UNLESS OTHERWISE SPECIFIED)	18"
	GROUND FAULT TYPE RECEPTACLE-(IVORY)	AS SPECIFIED
WP	GROUND FAULT RECEPTACLE WEATHERPROOF	AS SPECIFIED
	ABBREVIATIONS	
AFF	ABOVE FINISHED FLOOR	
AFG	ABOVE FINISHED GRADE	
ABV	MOUNT ABOVE COUNTER	
ABC	ABOVE CEILING	
EDF	ELECTRIC DRINKING FOUNTAIN	
FBE	FURNISHED & INSTALLED BY ELECTRICAL CONTRACTOR	
FBO	FURNISHED BY OTHERS, INSTALLED BY ELECTRICAL CONTRACTOR	
GND	GROUND	
UON	UNLESS OTHERWISE NOTED	
WH	WATER HEATER	
WP	WEATHER PROOF, NEMA 3R	
PTZ	PAN-TILT-ZOOM	

ELECTRICAL NOTES:

1. REPLACE EXISTING FUSES WITH 5KV, 30A, TYPE E FUSES THAT FEED THE TRANSFORMER.

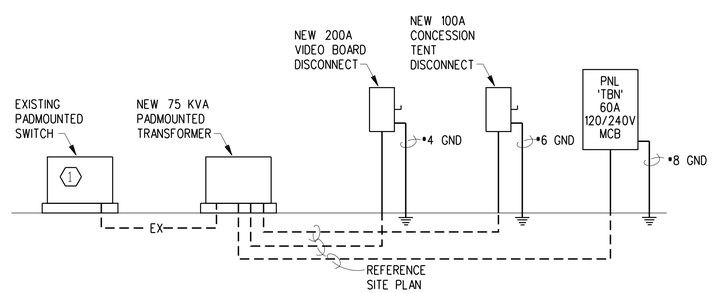

NORTH RISER DIAGRAM

NO SCALE

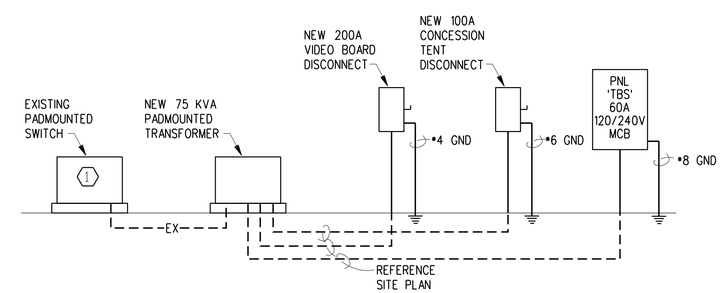

SOUTH RISER DIAGRAM

NO SCALE

ICT
I.C.Thomasson Associates, Inc.
CONSULTING ENGINEERS
2950 KRAFT DRIVE, SUITE 500
NASHVILLE, TENNESSEE 37204
PHONE (615) 346-3400
FAX (615)346-3550
ICT PROJECT No. 110477

HFR DESIGN
1910
ARCHITECTURE
ENGINEERING
PLANNING
INTERIORS

HART FREELAND ROBERTS, INC.
7101 Executive Center Drive
Suite 300
Brentwood, TN 37024

615.370.8500 phone
615.370.8530 fax
www.hfrdesign.com web

Nashville, Tennessee
Jackson, Tennessee
Kansas City, Missouri
Louisville, Kentucky

JOHN PAUL VIERKANT
REGISTERED ENGINEER
Agric. Mech.
No. 110067
STATE OF TENNESSEE
4/19/12

HALE STADIUM RENOVATIONS NORTH AND SOUTH ENTRIES TENNESSEE STATE UNIVERSITY

JOHN A MERRITT BLVD
NASHVILLE, TN
SBC# 166/001-02-2011

PROJ. NO.: 2011171

DATE: 25 APRIL 2012

ELECTRICAL-LEGEND

E

0.00

©COPYRIGHT — ALL RIGHTS RESERVED. NO PORTION(S) OF THIS DOCUMENT MAY BE REPRODUCED WITHOUT THE EXPRESSED WRITTEN CONSENT OF HART FREELAND ROBERTS, INC.

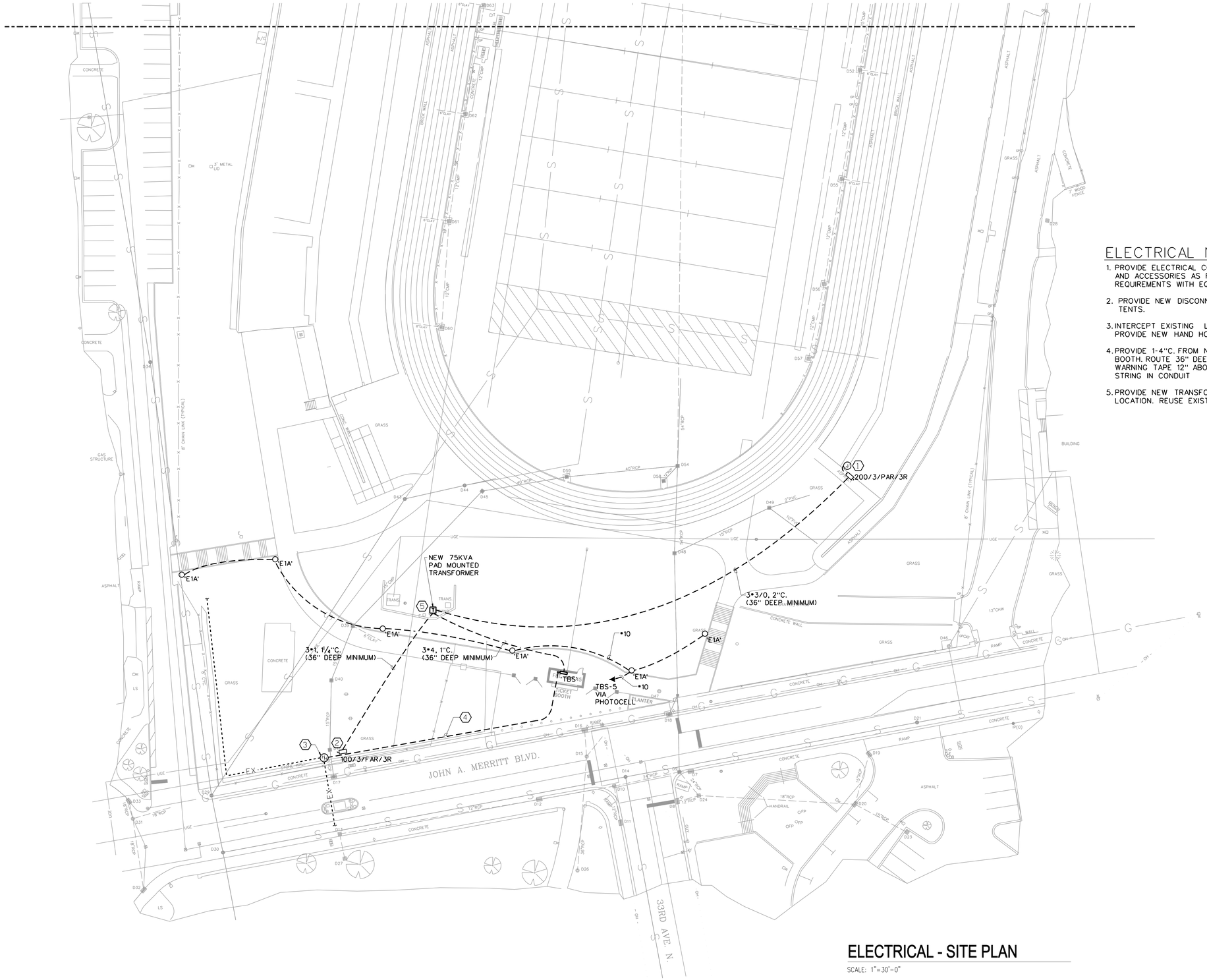

ELECTRICAL - SITE PLAN

SCALE: 1"=30'-0"

ELECTRICAL NOTES:

1. PROVIDE ELECTRICAL CONNECTIONS TO VIDEO BOARD AND ACCESSORIES AS REQUIRED. COORDINATE ALL REQUIREMENTS WITH EQUIPMENT PRIOR TO ROUGH-IN.
2. PROVIDE NEW DISCONNECT TO SERVE CONCESSION TENTS.
3. INTERCEPT EXISTING LOW VOLTAGE DUCTBANK AND PROVIDE NEW HAND HOLE.
4. PROVIDE 1-4"C. FROM NEW HAND HOLE TO TICKET BOOTH. ROUTE 36" DEEP MINIMUM AND PROVIDE WARNING TAPE 12" ABOVE CONDUIT. PROVIDE PULL STRING IN CONDUIT
5. PROVIDE NEW TRANSFORMER AT EXISTING TRANSFORMER LOCATION. REUSE EXISTING PRIMARY CONDUCTORS.

ICT
I.C.Thomason Associates, Inc.
CONSULTING ENGINEERS
2950 KRAFT DRIVE, SUITE 500
NASHVILLE, TENNESSEE 37204
PHONE (615) 346-3400
FAX (615)346-3550
ICT PROJECT No. 110477

HFR DESIGN
1910
ARCHITECTURE
ENGINEERING
PLANNING
INTERIORS

HART FREELAND ROBERTS, INC.
7101 Executive Center Drive
Suite 300
Brentwood, TN 37024

615.370.8500 phone
615.370.8530 fax
www.hfrdesign.com web

Nashville, Tennessee
Jackson, Tennessee
Kansas City, Missouri
Louisville, Kentucky

JOHN PAUL VIERKANT
REGISTERED ENGINEER
AGENT OF ACCEPTANCE
NO. 110062
STATE OF TENNESSEE
4/19/12

HALE STADIUM RENOVATIONS NORTH AND SOUTH ENTRIES TENNESSEE STATE UNIVERSITY

JOHN A MERRITT BLVD
NASHVILLE, TN
SBC# 166/001-02-2011

PROJ. NO.: 2011171

DATE: 25 APRIL 2012

ELECTRICAL - SITE PLAN

E
0.01

©COPYRIGHT — ALL RIGHTS RESERVED. NO PORTION(S) OF THIS DOCUMENT MAY BE REPRODUCED WITHOUT THE EXPRESSED WRITTEN CONSENT OF HART FREELAND ROBERTS, INC.

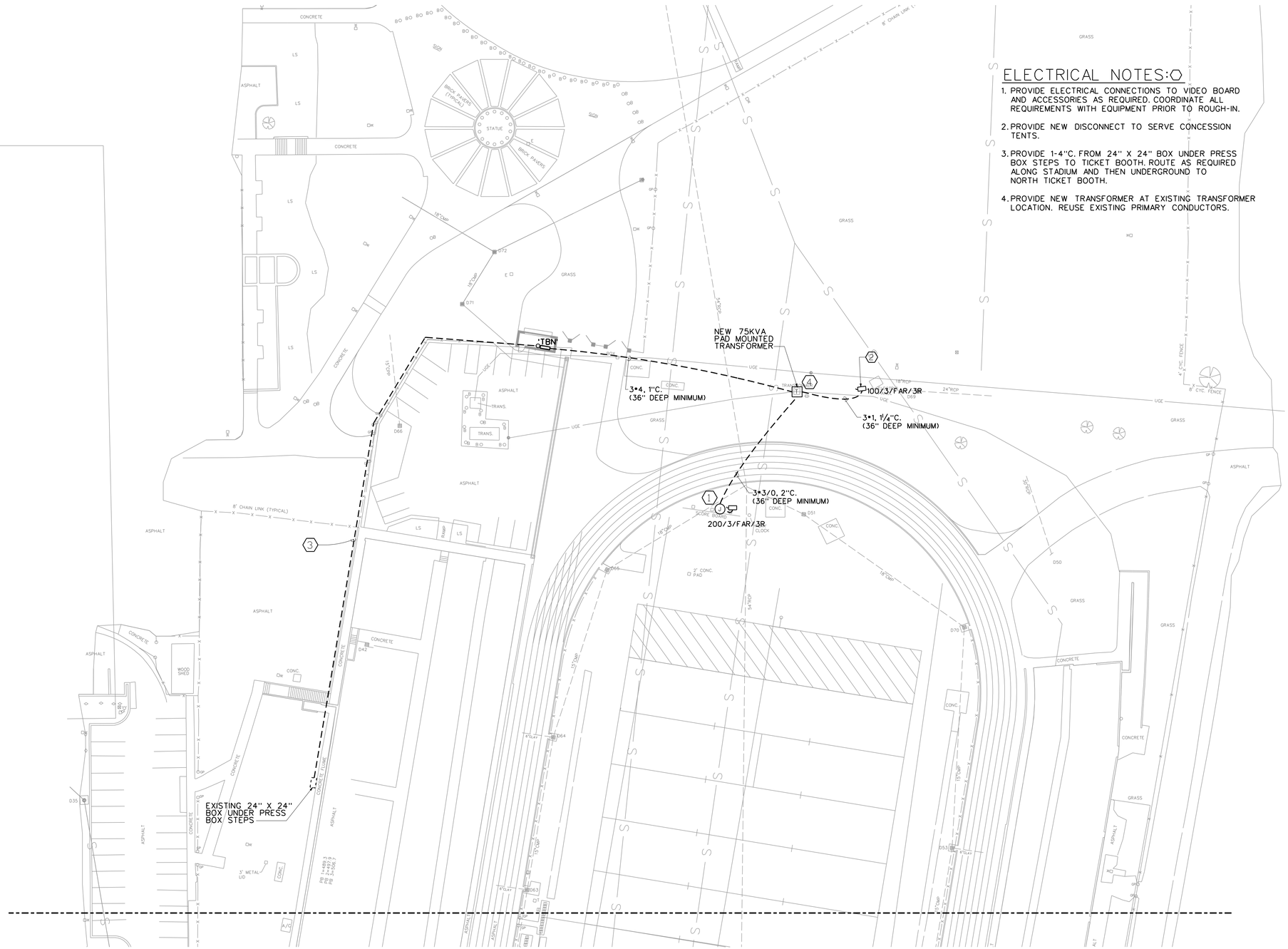

ELECTRICAL NOTES:

1. PROVIDE ELECTRICAL CONNECTIONS TO VIDEO BOARD AND ACCESSORIES AS REQUIRED. COORDINATE ALL REQUIREMENTS WITH EQUIPMENT PRIOR TO ROUGH-IN.
2. PROVIDE NEW DISCONNECT TO SERVE CONCESSION TENTS.
3. PROVIDE 1-4"C. FROM 24" X 24" BOX UNDER PRESS BOX STEPS TO TICKET BOOTH. ROUTE AS REQUIRED ALONG STADIUM AND THEN UNDERGROUND TO NORTH TICKET BOOTH.
4. PROVIDE NEW TRANSFORMER AT EXISTING TRANSFORMER LOCATION. REUSE EXISTING PRIMARY CONDUCTORS.

ELECTRICAL - SITE PLAN

SCALE: 1"=30'-0"

ICT
I.C.Thomason Associates, Inc.
CONSULTING ENGINEERS
2950 KRAFT DRIVE, SUITE 500
NASHVILLE, TENNESSEE 37204
PHONE (615)346-3400
FAX (615)346-3550
ICT PROJECT No. 110477

HFR DESIGN
1910
ARCHITECTURE
ENGINEERING
PLANNING
INTERIORS

HART FREELAND ROBERTS, INC.
7101 Executive Center Drive
Suite 300
Brentwood, TN 37024
615.370.8500 phone
615.370.8530 fax
www.hfrdesign.com web
Nashville, Tennessee
Jackson, Tennessee
Kansas City, Missouri
Louisville, Kentucky

JOHN PAUL VIERKANT
REGISTERED ENGINEER
AGRICULTURE
NO. 110CE
STATE OF TENNESSEE
4/19/12

HALE STADIUM RENOVATIONS NORTH AND SOUTH ENTRIES TENNESSEE STATE UNIVERSITY

JOHN A MERRITT BLVD
NASHVILLE, TN
SBC# 166/001-02-2011

PROJ. NO.: 2011171
DATE: 25 APRIL 2012

ELECTRICAL - SITE PLAN

E
0.02

© COPYRIGHT — ALL RIGHTS RESERVED. NO PORTION(S) OF THIS DOCUMENT MAY BE REPRODUCED WITHOUT THE EXPRESSED WRITTEN CONSENT OF HART FREELAND ROBERTS, INC.

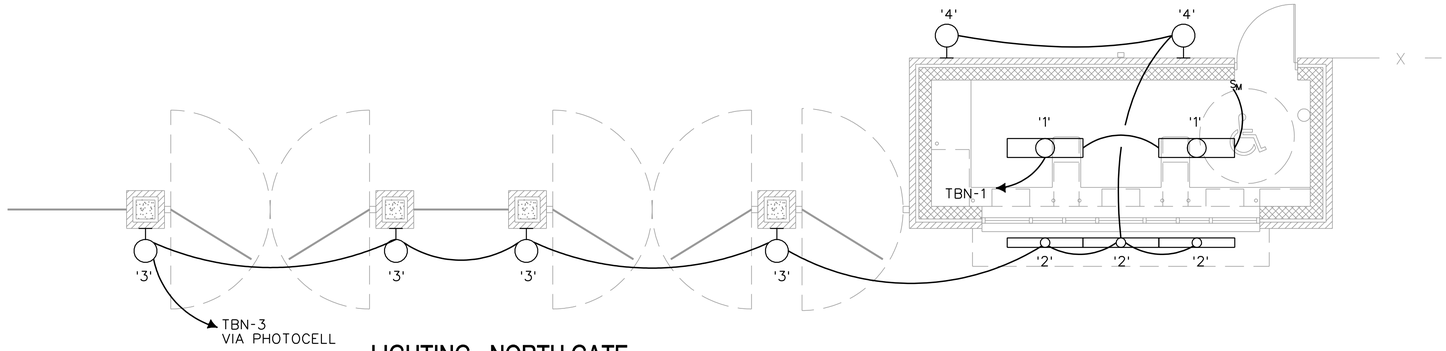

LIGHTING - NORTH GATE FLOOR PLAN

0 2' 4' 8'
1/4" = 1'-0"

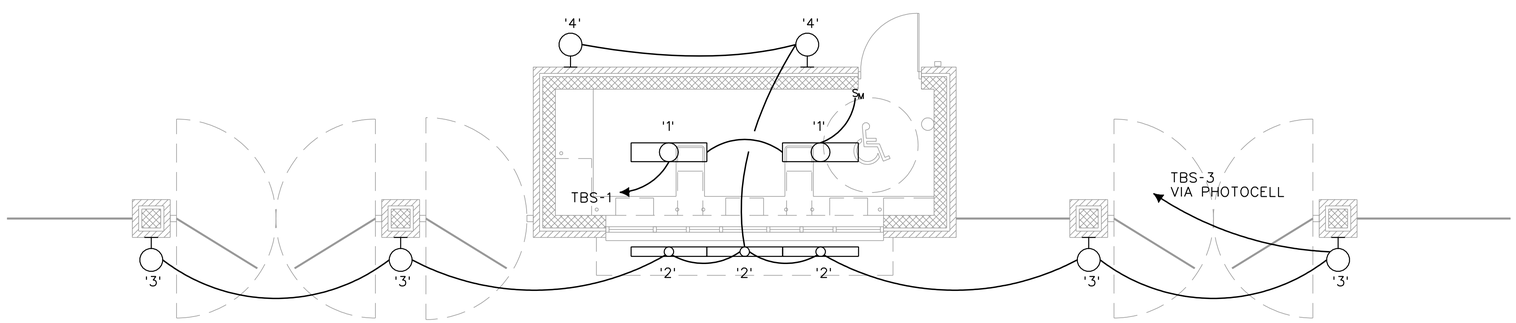

LIGHTING - SOUTH GATE FLOOR PLAN

0 2' 4' 6'
1/4" = 1'-0"

FIXTURE SCHEDULE

TYPE	MANUFACTURER	CATALOG NUMBER	NUMBER & SIZE LAMPS	MOUNT	REMARKS
1	LSI	EG32W32SSO10UE	2-32WT8	SURFACE	SURFACE MOUNT LIGHT-END FEED
2	LSI	FC232SSOIBUE	2-32WT8	SURFACE	UPLIGHT-LOCATE REMOTE BALLAST INSIDE TICKET BOOTH
3	KENALL	RHL720CMBPIA2-26QDV	2-26WCFL	SURFACE	COLUMN LIGHT
4	KIM	WD14D360L3K120BL	LED	SURFACE	WALLPACK
E1A	KIM	FMWTH3LEDBL120/ KRS125120	LED	POLE	CAMPUS STANDARD PEDESTRIAN POLE

I.C.Thomason Associates, Inc.
CONSULTING ENGINEERS
2950 KRAFT DRIVE, SUITE 500
NASHVILLE, TENNESSEE 37204
PHONE (615) 346-3400
FAX (615)346-3550
ICT PROJECT No. 110477

HFR DESIGN
1910
ARCHITECTURE
ENGINEERING
PLANNING
INTERIORS

HART FREELAND ROBERTS, INC.
7101 Executive Center Drive
Suite 300
Brentwood, TN 37024
615.370.8500 phone
615.370.8530 fax
www.hfrdesign.com web
Nashville, Tennessee
Jackson, Tennessee
Kansas City, Missouri
Louisville, Kentucky

ZACH PAUL VIERKANT
REGISTERED ENGINEER
AGENT: I.C. THOMASON ASSOCIATES, INC.
No. 110067
STATE OF TENNESSEE
4/19/12

HALE STADIUM RENOVATIONS NORTH AND SOUTH ENTRIES TENNESSEE STATE UNIVERSITY

JOHN A MERRITT BLVD
NASHVILLE, TN
SBC# 166/001-02-2011

PROJ. NO.: 2011171
DATE: 25 APRIL 2012

LIGHTING-FLOOR PLANS

E
1.01

©COPYRIGHT — ALL RIGHTS RESERVED. NO PORTION(S) OF THIS DOCUMENT MAY BE REPRODUCED WITHOUT THE EXPRESSED WRITTEN CONSENT OF HART FREELAND ROBERTS, INC.

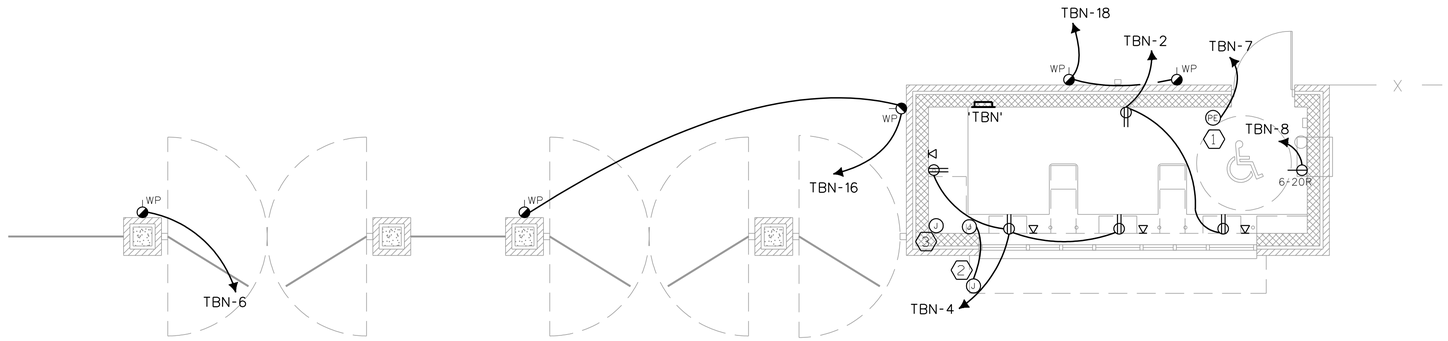

POWER & SYSTEMS - NORTH GATE FLOOR PLAN

0 2' 4' 6'
1/4" = 1'-0"

ELECTRICAL NOTES:

1. LOCATE PHOTOCELL ON ROOF FACING NORTH.
2. PROVIDE JUNCTION BOX IN CANOPY FOR OWNER PROVIDED SECURITY CAMERA. STUB 1"C. INTO TICKET BOOTH.
3. PROVIDE JUNCTION BOX FOR OWNER PROVIDED SECURITY CAMERA.

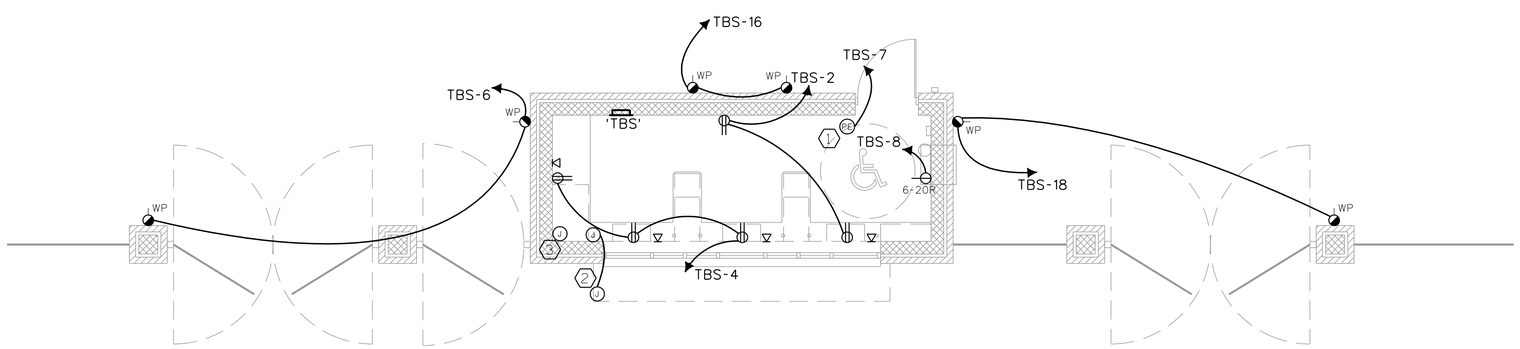

POWER & SYSTEMS - SOUTH GATE FLOOR PLAN

0 2' 4' 6'
1/4" = 1'-0"

I.C.Thomason Associates, Inc.
CONSULTING ENGINEERS
2950 KRAFT DRIVE, SUITE 500
NASHVILLE, TENNESSEE 37204
PHONE (615) 346-3400
FAX (615)346-3550
ICT PROJECT No. 110477

HFR DESIGN
1910
ARCHITECTURE
ENGINEERING
PLANNING
INTERIORS

HART FREELAND ROBERTS, INC.
7101 Executive Center Drive
Suite 300
Brentwood, TN 37024
615.370.8500 phone
615.370.8530 fax
www.hfrdesign.com web
Nashville, Tennessee
Jackson, Tennessee
Kansas City, Missouri
Louisville, Kentucky

HALE STADIUM RENOVATIONS NORTH AND SOUTH ENTRIES TENNESSEE STATE UNIVERSITY

JOHN A MERRITT BLVD
NASHVILLE, TN
SBC# 166/001-02-2011

PROJ. NO.: 2011171
DATE: 25 APRIL 2012

POWER & SYSTEMS- FLOOR PLANS

E
2.01

©COPYRIGHT — ALL RIGHTS RESERVED. NO PORTION(S) OF THIS DOCUMENT MAY BE REPRODUCED WITHOUT THE EXPRESSED WRITTEN CONSENT OF HART FREELAND ROBERTS, INC.